Kit 75582

Volkswagen MK V Platform

Slam Front Application

INSTALLATION GUIDE

NOTE: FOR USE ON VEHICLES WITH FRAME C-NOTCH MODIFICATIONS ONLY. FRONT SWAY BAR MUST BE REMOVED.

For maximum effectiveness and safety, please read these instructions completely before proceeding with installation.

Failure to read these instructions can result in an incorrect installation.

MN-712 • (061803) • ECR 9041

TABLE OF CONTENTS

Introduction 2
Notation Explanation 2

Important Safety Notices 2

Installation Diagram 3
Hardware List 3
Tools List 3

Installing the Air Suspension 4
Preparing the Vehicle 4
Removing the Strut 4
Installing the New Strut Assembly 6
Aligning the Vehicle 6
Torque Specifications 6

Tips for Installing the Air Lines 7
Cutting Air Lines 7
Push-to-Connect (PTC) Fittings 7
Checking for Leaks 7
Fixing Leaks 7

Before Operating 8
Suggested Driving Air Pressure and Maximum Air Pressure 8
Installation Checklist 9
Post Installation Checklist 9

Use, Maintenance and Servicing 10
Tuning the Air Pressure 10
Troubleshooting Guide 10

Limited Warranty & Return Policy 13

Replacement Information 13

Contact Information 13

⚠ DANGER

This application is designed for previously modified vehicles where the frame has been notched for axle clearance. Air Lift Company does not recommend frame modification and any modifications previously done are at the owner's risk. Air Lift Company is not liable for vehicle or personal damage due to modifications performed.

Introduction

Air Lift Performance thanks you for purchasing the most complete, fully engineered high performance air suspension made for the Volkswagen MK V Performance kit. Read these installation instructions to correctly and safely set up the vehicle for a #lifeonair.

Air Lift assumes that the installer has the mechanical knowledge and ability to work on vehicle suspension systems and has basic tools necessary to complete the project. Special tools needed to complete the installation are noted on the Installation Diagram page.

Air Lift reserves the right to make changes and improvements to its products and publications at any time. For the latest version of this manual, contact Air Lift Performance at **(800) 248-0892** or visit **www.airliftperformance.com**.

An Air Lift Performance air management system is highly recommended for this product. Learn more at **air-lift.co/productlines**.

NOTATION EXPLANATION

Hazard notations appear in various locations in this publication. Information which is highlighted by one of these notations must be observed to help minimize risk of personal injury or possible improper installation which may render the vehicle unsafe. Notes are used to help emphasize areas of procedural importance and provide helpful suggestions. The following definitions explain the use of these notations as they appear throughout this guide.

DANGER — INDICATES IMMEDIATE HAZARDS WHICH WILL RESULT IN SEVERE PERSONAL INJURY OR DEATH.

WARNING — INDICATES HAZARDS OR UNSAFE PRACTICES WHICH COULD RESULT IN SEVERE PERSONAL INJURY OR DEATH.

CAUTION — INDICATES HAZARDS OR UNSAFE PRACTICES WHICH COULD RESULT IN DAMAGE TO THE MACHINE OR MINOR PERSONAL INJURY.

NOTE — *Indicates a procedure, practice or hint which is important to highlight.*

Important Safety Notices

WARNING — DO NOT INFLATE AIR SPRINGS WHILE OFF OF THE VEHICLE. DAMAGE TO ASSEMBLY MAY RESULT AND VOID WARRANTY.

CAUTION — DO NOT WELD TO OR MODIFY PERFORMANCE STRUTS/SHOCKS IN ANY WAY. DAMAGE TO UNIT MAY OCCUR AND WILL VOID WARRANTY.

Installation Diagram

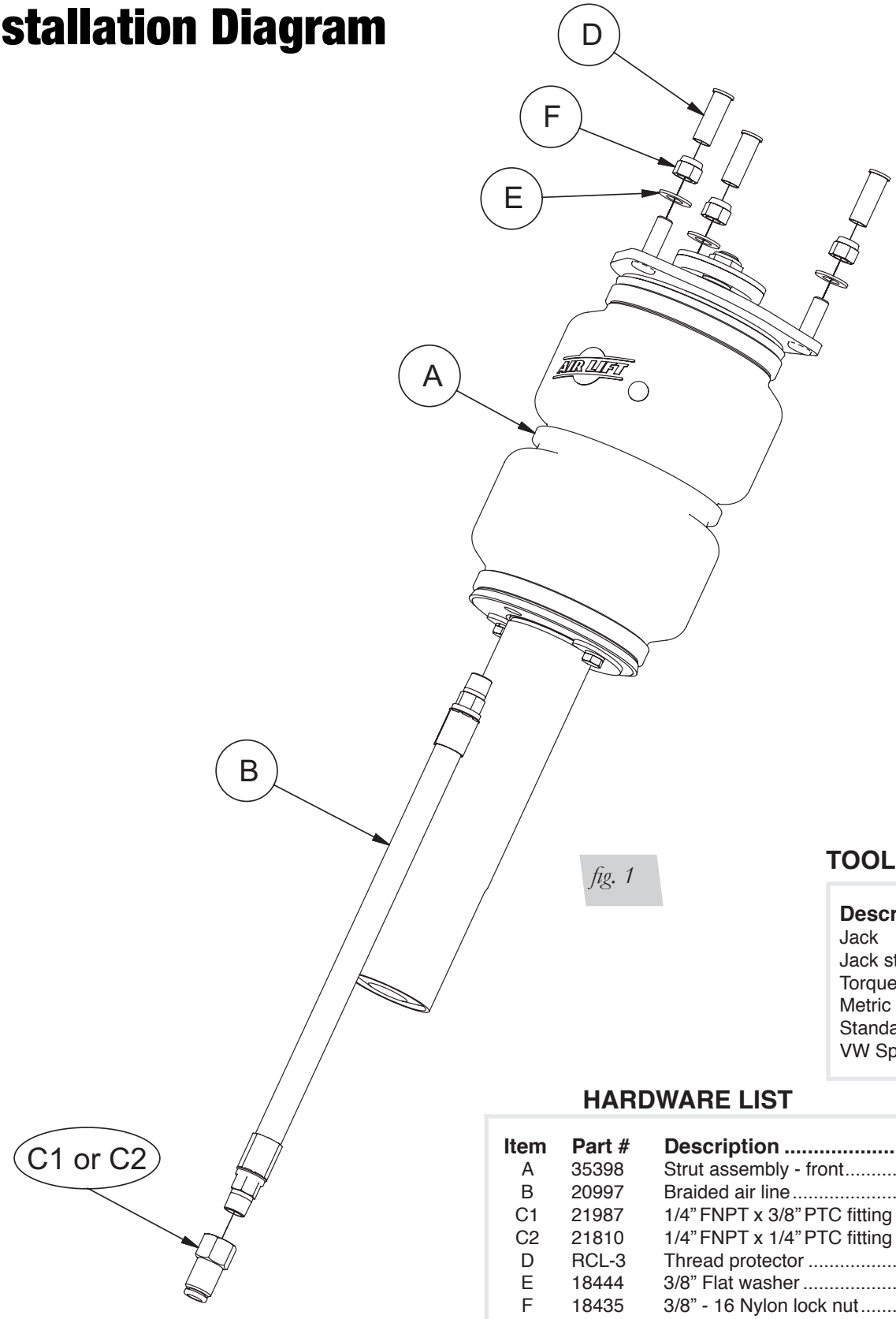

fig. 1

TOOLS LIST

Description
Jack
Jack stands or hoist
Torque wrench
Metric Wrenches
Standard Wrenches
VW Spreader 3424

HARDWARE LIST

Item	Part #	Description	Qty
A	35398	Strut assembly - front	2
B	20997	Braided air line	2
C1	21987	1/4" FNPT x 3/8" PTC fitting	2
C2	21810	1/4" FNPT x 1/4" PTC fitting	2
D	RCL-3	Thread protector	6
E	18444	3/8" Flat washer	6
F	18435	3/8" - 16 Nylon lock nut	6

STOP! Missing or damaged parts? Call Air Lift customer service at (800) 248-0892 for a replacement part.

Installing the Air Suspension

PREPARING THE VEHICLE

1. Elevate the vehicle and support the body with a hoist or jack stands.
2. Remove the front wheels.

NOTE

If the vehicle is equipped with automatic headlight vertical aim control, detach the unit from the lower control arm (Fig. 2 - part 1 pictured) to prevent overextension.

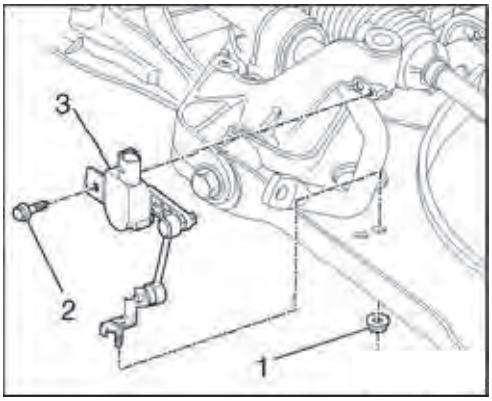

fig. 2

REMOVING THE STRUT

1. Unbolt the sway bar from the tab (Fig. 3). Sway bar removal, see factory repair manual for instructions.
2. Unthread and remove the axle bolt from the hub assembly (Fig. 3a).

fig. 3

fig. 3a

3. Remove the three lower nuts from the lower ball joint and control arm (Fig. 4). Detach the ball joint and hub assembly from the control arm.

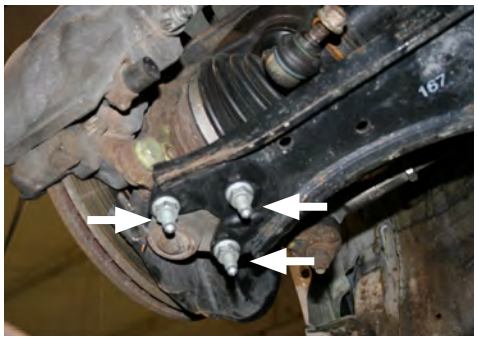

fig. 4

4. Pull drive axle out of the hub assembly and secure the axle to the body with wire.

⚠ CAUTION

TO PREVENT DAMAGE TO THE INNER AXLE JOINT, DO NOT ALLOW THE AXLE TO HANG FREE.

5. Reattach the lower ball joint to the lower control arm.
6. Support the hub assembly.
7. Remove the bolt at the back of the hub assembly to the strut.
8. Spread the hub assembly slot and push down on the hub to release the strut from the lower mount (Fig. 5). (Volkswagen-specific tool is spreader 3424).

fig. 5

9. Pull weatherstripping away from the plenum chamber cover within the engine bay and pull cover up. Removing the wiper arms and completely removing the cover will gain more access.
10. Remove the three bolts from the upper strut mount (Fig. 6) and remove the strut assembly from the vehicle.

fig. 6

INSTALLING THE NEW STRUT ASSEMBLY

1. Begin by installing the leader line into the air spring. Tighten the appropriate fitting to the air line (1 3/4 turns beyond hand-tight). Tighten the leader line into the air spring 1 3/4 turns beyond hand-tight (Fig. 7).

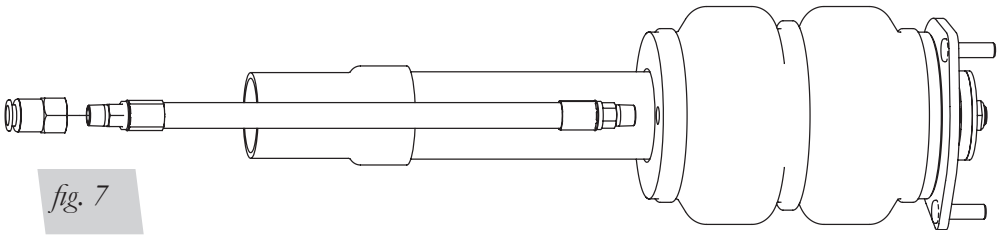

fig. 7

2. Insert strut into the hub assembly. Reinstall the lower mounting bolt and torque to 70Nm (52 lb.-ft.).
3. Lift assembly into strut pocket and align upper mounting bolts with three holes. Using the supplied nuts and washers, tighten the upper mount to 37Nm (27 lb.-ft.).
4. Remove the lower ball joint bolts again and separate the control arm from the joint. Reinsert the axle.
5. Reinstall the ball joint nuts and torque to 60Nm (44 lb.-ft.).
6. Torque the hex head drive axle to 200Nm (148 lb.-ft.). If the bolt is a 12-point, torque to 70Nm (52 lb.-ft.).
7. Reinstall the plenum chamber cover and wiper arms if previously removed.

ALIGNING THE VEHICLE

1. Using the control system, set the vehicle height to the new custom ride height.
2. If the custom ride height is lower than stock, Air Lift recommends loosening all pivot points (bolts, nuts) on any control arm, strut arm or radius rod that contains bushings. Once they have been loosened, re-torque to stock specifications.

NOTE

It may be necessary to cycle the suspension to loosen the bushing from its mount. This will help unload the bushing to make it last longer at its new position based on the custom ride height.

Torque Specifications		
Location	Nm	Lb.-ft.
Strut Lower Mount Pinch Bolt	70	52
Strut Upper Mount Nuts	37	27
Ball Joint Nuts	60	44
Hex Head Drive Axle Bolt	200	148
12-Point Drive Axle Bolt	70	52

Table 1

Tips for Installing the Air Lines

CUTTING AIR LINES

When cutting air lines, use a sharp knife or a hose cutter and make clean, square cuts (Fig. 8). Do not use scissors or wire cutters because these tools will deform the air line, causing it to leak around fittings. Do not cut the lines at an angle.

The minimum bend radius for 1/4” air line is 25mm (1”). The minimum bend radius for 3/8” air line is 38mm (1 1/2”). Do not bend the air line less than the minimum bend radius or side load the fitting connections. Air lines are to be installed straight into fittings.

Inspect the air line for scratches that run lengthwise prior to installation. Contact Air Lift customer service at **(800) 248-0892** if the air line is damaged.

fig. 8

To watch a video demonstrating proper air line cutting, go to **air-lift.co/cuttingairline**

PUSH-TO-CONNECT (PTC) FITTINGS

Air lines should be pushed into the push-to-connect fittings firmly, with a slight side-to-side rotational twist. Check the connection by pulling on each line to verify a robust connection.

NOTE

To release the air line from the connection (Fig. 9), first release all air from the system. Push in on the air line (step 1), push the collar in (step 2), and with the collar depressed, pull the air line out of the fitting (step 3).

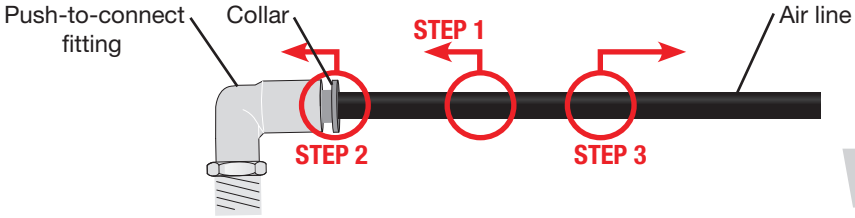

fig. 9

CHECKING FOR LEAKS

1. Inflate the air spring to 75-90 PSI (5.2-6.2BAR).
2. Spray all connections with a solution of liquid dish soap and water. Spot leaks easily by looking for bubbles in the soapy water.
3. After the test, deflate the springs to the minimum pressure required to restore the system to normal ride height.
4. Check the air pressure again after 24 hours. A 2-4 PSI (.14-.28BAR) loss after initial installation is normal. Retest for leaks if the loss is more than 5 PSI (.34BAR).

FIXING LEAKS

1. If there is a problem with the push-to-connect fitting, remove the air line as described above. Trim 25mm (1”) off the end of the air line. Be sure the cut is clean and square (see Fig. 8).
2. Reinsert the air line into the push-to-connect fitting as described above.

Before Operating

1. Some struts for this vehicle come with a nine-position damping dial for added adjustability (Fig. 10). If not, proceed to 2.

NOTE

Before driving your vehicle, set the new struts to their highest setting by turning the black dial on the shaft of the strut as far as it will go to the right (position 9).

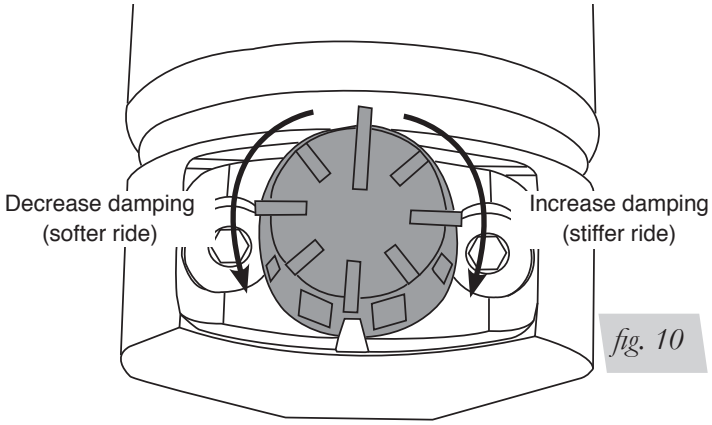

fig. 10

2. Next, completely deflate and reinflate the air bags 2-3 times. This procedure will purge any trapped air in the dampers and allow for maximum performance. For ride performance and the most versatility, Air Lift Performance recommends setting the strut dial (if equipped) to position 6 or higher.

⚠ CAUTION

MAKE SURE THE FRONT WHEELS ARE STRAIGHT WHEN DEFLATING AND REINFLATING AIR BAGS.

3. Inflate and deflate the system (do not exceed 100PSI [7BAR]) to check for clearance or binding issues. With the air springs deflated, check clearances on everything so as not to pinch brake lines, vent tubes, etc. Clear lines if necessary.
4. Inflate the air springs to 75-90 PSI (5.2-6.2BAR) and check all connections for leaks.
5. An Air Lift Performance air management system is strongly recommended for this product. To learn more about Air Lift air management systems visit **air-lift.co/productlines.**
6. Please continue by reading the Product Use, Maintenance and Servicing section.

Suggested Driving Air Pressure	Maximum Air Pressure
45-70 PSI (3-4.8BAR)	**100 PSI (7BAR)**
FAILURE TO MAINTAIN ADEQUATE MINIMUM PRESSURE (OR PRESSURE PROPORTIONAL TO LOAD) MAY RESULT IN EXCESSIVE BOTTOMING OUT AND **WILL VOID THE WARRANTY**.	

INSTALLATION CHECKLIST

☐ **Clearance** — Inflate the air springs to 75-90 PSI (5.2-6.2BAR) and make sure there is at least 12mm (1/2") clearance from anything that might rub against the air spring. This should be checked with the air spring fully inflated and fully deflated.

☐ **Leak** — Inflate the air springs to 75-90 PSI (5.2-6.2BAR) and check all connections for leaks. All leaks must be eliminated before the vehicle is road tested.

☐ **Heat** — Be sure there is sufficient clearance from heat sources, at least 152mm (6") from air springs and air lines. If a heat shield was included in the kit, install it. If there is no heat shield, but one is required, call Air Lift customer service at **(800) 248-0892**.

☐ **Fastener** — Recheck all bolts for proper torque.

☐ **Road** — Inflate the springs to recommended driving pressures (Table 2). Drive the vehicle 16km (10 miles) and recheck for clearance, loose fasteners and air leaks.

☐ **Operating instructions** — If professionally installed, the installer should review the operating instructions with the owner. Be sure to provide the owner with all paperwork that came with the kit.

POST-INSTALLATION CHECKLIST

☐ **Overnight leak down test** — Recheck air pressure 24 hours after installation and driving of the vehicle. If the pressure has dropped more than 5 PSI (.34BAR), there is a leak that must be fixed.

☐ **Air pressure requirements** — It is important to understand the air pressure requirements of the air spring system. Regardless of load, the air pressure should always be adjusted to maintain adequate ride height at all times while driving.

☐ **Thirty-day or 800km (500-mile) test** —Recheck the air spring system after 30 days or 800km (500 miles), whichever comes first. If any part shows signs of rubbing or abrasion, the source should be identified and moved, if possible. If it is not possible to relocate the cause of the abrasion, the air spring may need to be remounted. If professionally installed, the installer should be consulted. Check all fasteners for tightness.

Use, Maintenance and Servicing

1. An Air Lift air management system is strongly recommended for this product, but it is possible to operate without one. The air lines can be routed to Schrader valves for use with a separate air compressor. Air lines and Schrader valves are not included with Air Lift Performance kits and would need to be purchased separately. To learn more about Air Lift management systems visit **air-lift.co/productlines**.
2. Check the air pressure before driving.

⚠ WARNING

BEFORE SERVICING THE VEHICLE, MAKE SURE TO TURN OFF "RISE ON START" AND "PRESET MAINTAIN." THIS WILL ELIMINATE ANY UNINTENDED SUSPENSION CYCLING IF YOU NEED TO TURN THE KEY ON IN THE VEHICLE FOR ANY REASON.

TUNING THE AIR PRESSURE

Pressure determination comes down to three things — level vehicle, ride comfort and stability.

1. **Level vehicle**
   Depending on load, it is possible one side will need more pressure than the other to level the vehicle.
2. **Ride comfort**
   If the vehicle has a harsh ride, it may be due to either too much pressure or not enough causing frequent bottoming out. Also, riding the vehicle at the top, or close to the top of the available stroke will cause an uncomfortable ride due to a lack of rebound travel. This situation should be avoided for driving any significant distance. Try different pressures to determine the best ride comfort. See the Air Lift suggested driving air pressure for this vehicle (Table 2).
3. **Stability**
   Stability translates into safety and should be the priority, meaning the driver may need to sacrifice a perfectly level and comfortable ride. Stability issues include roll control, bounce, dive during braking and sponginess. Tuning out these problems usually requires additional air pressure, damping or both.

TROUBLESHOOTING GUIDE

PROBLEM	CAUSE	SOLUTION
Air spring won't maintain pressure.	Leak at fitting, air line not cut properly or damage to air line during installation.	Find location of leak by spraying listed components with soapy water solution and look for bubbles. Tighten air fitting, re-cut air line or replace damaged components.
	Leak at lower O-ring on damper if air spring is over the damper.	Spray bottom of air spring with soapy water solution and look for bubbles. Contact Air Lift customer service at (800) 248-0892 to determine if component should be replaced.
Knocking noise when hitting bumps.	Loose suspension component such as locking collar on damper.	Tighten lower locking collar with significant force, check and tighten suspension components to factory specs at desired ride height.
	Driving vehicle too close to maximum extension.	Check current ride height and compare to maximum height. If there is less than 25mm (1") difference, reduce air pressure to lower ride height.
		Lengthen strut or shock to increase available up travel.
Suspension bottoms out.	Air pressure is too low, causing air springs to bottom out.	Raise air pressure.
The ride is too bouncy.	Air pressure is too high, causing air springs to be too stiff.	Lower air pressure and adjust damper length if necessary to achieve proper ride height.
	Damping is inadequate.	Increase damping with adjusters.
The ride is too soft or floaty.	Damping is inadequate.	
The ride is too harsh.	Excessive damping.	Reduce damping with adjusters.

Notes

Notes

Limited Warranty and Return Policy

Air Lift Company provides a 1-year limited warranty to the original purchaser of Air Lift Performance damper kits from the date of original purchase, that the products will be free from defects in workmanship and materials when used on vehicles as specified by Air Lift Company and under normal operating conditions, subject to the requirements and exclusions set forth in the full Limited Warranty and Return Policy that is available online at **www.airliftperformance.com/warranty**.

For additional warranty information contact Air Lift Company customer service.

Replacement Part Information

If replacement parts are needed, call Air Lift customer service. Most parts are immediately available and can be shipped the same day.

Contact Air Lift Company customer service at (800) 248-0892 first if:

- Parts are missing from the kit.
- Need technical assistance on installation or operation.
- Broken or defective parts in the kit.
- Wrong parts in the kit.
- Have a warranty claim or question.

Contact the retailer where the kit was purchased:

- If it is necessary to return or exchange the kit for any reason.
- If there is a problem with shipping if shipped from the retailer.
- If there is a problem with the price.

Contact Information

Mailing address	P.O. Box 80167 Lansing, MI 48908-0167
Shipping address for returns	2727 Snow Road Lansing, MI 48917
Phone	Toll free: (800) 248-0892 International: (517) 322-2144
Email	service@airliftcompany.com
Web address	www.airliftcompany.com

Air Lift Company reserves the right to make changes and improvements to its products and publications at any time. For the latest version of this manual, contact Air Lift Company at **(800) 248-0892** or visit **www.airliftperformance.com**.

NEED HELP?

Contact Air Lift Company customer service department by calling (800) 248-0892. For calls from outside the USA or Canada, dial (517) 322-2144.

Connect by searching for **Air Lift Performance** *#LifeonAir*

Thank you for purchasing Air Lift Performance products!

Air Lift Performance • 2727 Snow Road • Lansing, MI 48917 or PO Box 80167 • Lansing, MI 48908-0167
Toll Free (800) 248-0892 • Local (517) 322-2144 • Fax (517) 322-0240 • www.airliftperformance.com

Printed in the
USA
JJC-0318

California: ⚠WARNING: Cancer and Reproductive Harm – www.P65Warnings.ca.gov

Kit 75690

Volkswagen MKV & MKVI

Independent Rear Application

INSTALLATION GUIDE

For maximum effectiveness and safety, please read these instructions completely before proceeding with installation.

Failure to read these instructions can result in an incorrect installation.

MN-809 • (041603) • ECR 7578

TABLE OF CONTENTS

Introduction 2
Notation Explanation 2
Important Safety Notices 2
Installation Diagram 3
Hardware List 3
Installing the Air Suspension 4
Preparing the Vehicle 4
Installing the Kit Components 4
Routing the Air Lines 9
Before Operating 10
Setting the Ride Height 10
Torque Specifications 10
Suggested Driving Air Pressure and Maximum Air Pressure 10
Check for Binding 11
Aligning the Vehicle 11
Installation Checklist 12
Post-installation Checklist 12
Use, Maintenance and Servicing 13
Tuning the Air Pressure 13
Troubleshooting Guide 14
Tips for Installing Air Lines 15
Checking for Leaks 15
Fixing Leaks 15
Limited Warranty and Return Policy 16
Replacement Part Information 17
Contact Information 17

Introduction

Air Lift Performance thanks you for purchasing the most complete, fully engineered high-performance air suspension made for the Volkswagen MKV and MKVI. Read these installation instructions to correctly and safely set up the vehicle for a #lifeonair.

Air Lift assumes that the installer has the mechanical knowledge and ability to work on vehicle suspension systems and has basic tools necessary to complete the project. Special tools needed to complete the installation are noted on the Installation Diagram page.

Air Lift Performance reserves the right to make changes and improvements to its products and publications at any time. For the latest version of this manual, contact Air Lift Performance at **(800) 248-0892** or visit **www.airliftperformance.com**.

An Air Lift air management system is highly recommended for this product. Learn more at **air-lift.co/productlines**.

NOTATION EXPLANATION

Hazard notations appear in various locations in this publication. Information which is highlighted by one of these notations must be observed to help minimize risk of personal injury or possible improper installation which may render the vehicle unsafe. Notes are used to help emphasize areas of procedural importance and provide helpful suggestions. The following definitions explain the use of these notations as they appear throughout this guide.

⚠ DANGER INDICATES IMMEDIATE HAZARDS WHICH WILL RESULT IN SEVERE PERSONAL INJURY OR DEATH.

⚠ WARNING INDICATES HAZARDS OR UNSAFE PRACTICES WHICH COULD RESULT IN SEVERE PERSONAL INJURY OR DEATH.

⚠ CAUTION INDICATES HAZARDS OR UNSAFE PRACTICES WHICH COULD RESULT IN DAMAGE TO THE MACHINE OR MINOR PERSONAL INJURY.

NOTE *Indicates a procedure, practice or hint which is important to highlight.*

Important Safety Notices

⚠ WARNING DO NOT INFLATE AIR SPRINGS WHILE OFF OF THE VEHICLE. DAMAGE TO ASSEMBLY MAY RESULT AND VOID WARRANTY.

⚠ CAUTION DO NOT WELD TO, OR MODIFY PERFORMANCE STRUTS/SHOCKS IN ANY WAY. DAMAGE TO UNIT MAY OCCUR AND WILL VOID WARRANTY.

Installation Diagram

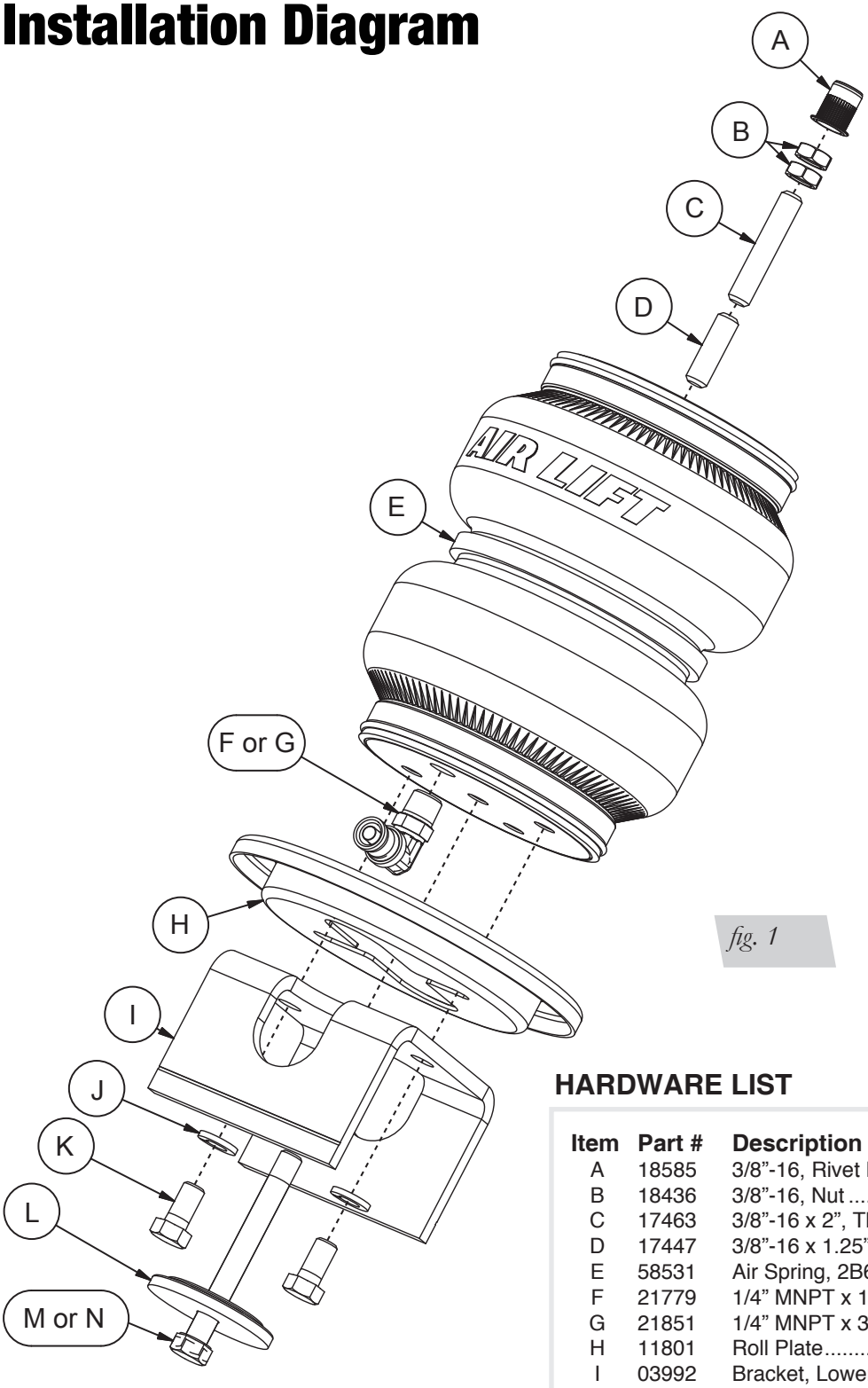

fig. 1

HARDWARE LIST

Item	Part #	Description	Qty
A	18585	3/8”-16, Rivet Nut	2
B	18436	3/8”-16, Nut	2
C	17463	3/8”-16 x 2”, Threaded Rod	2
D	17447	3/8”-16 x 1.25”, Threaded Rod	2
E	58531	Air Spring, 2B6 Reg, Recess Mount	2
F	21779	1/4” MNPT x 1/4” PTC Elbow DOT	2
G	21851	1/4” MNPT x 3/8” PTC - 90 Degree DOT	2
H	11801	Roll Plate	2
I	03992	Bracket, Lower, MKV Rear	2
J	18427	3/8” Lock Washer	4
K	17101	3/8”-16 x 3/4” Hex Bolt	4
L	13980	SPC, Spring Seat Centering	2
M	17109	3/8”-16 x 3.5”, HCS CZ	2
N	17442	3/8”-16 x 3”, HCS CZ	2

STOP! Missing or damaged parts? Call Air Lift customer service at (800) 248-0892 for a replacement part.

Installing the Air Suspension

NOTE *See important safety notices on page 2.*

PREPARING THE VEHICLE

1. Elevate the vehicle and support the body with a hoist or jack stands.
2. Remove the rear wheels.

NOTE *If the vehicle is equipped with automatic vertical headlight control, disconnect the coupling rod from the lower transverse link (Fig. 2).*

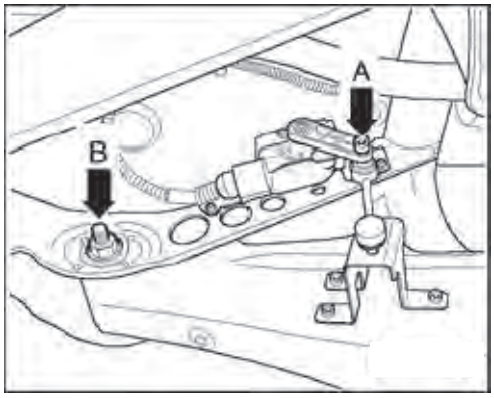

fig. 2

3. To remove the coil spring, it is recommended that you use a spring compressor.

⚠ CAUTION COIL SPRING UNDER COMPRESSION: THE COIL SPRING CAN BE REMOVED BY SECURELY SUPPORTING THE LOWER TRANSVERSE LINK WITH A JACK AND REMOVING THE LOWER MOUNTING BOLT FROM THE WHEEL BEARING HOUSING. SLOWLY LOWER THE TRANSVERSE LINK UNTIL THE SPRING IS LOOSE AND FREE FROM TENSION.

4. Remove the rubber isolator in the lower transverse link.
5. Disconnect the lower transverse link from the hub.

INSTALLING THE KIT COMPONENTS

1. Use a 17/32” drill bit to enlarge the hole in the upper coil spring perch. If the upper coil spring perch has been removed, drill in the center of where the perch used to be. The hole must be 17/32” for the rivet nut to be effective (Figs 3-6).

Factory / OEM Upper Spring Perch

fig. 3

fig. 4

Previously Cut Spring Perch with Aftermarket Shock

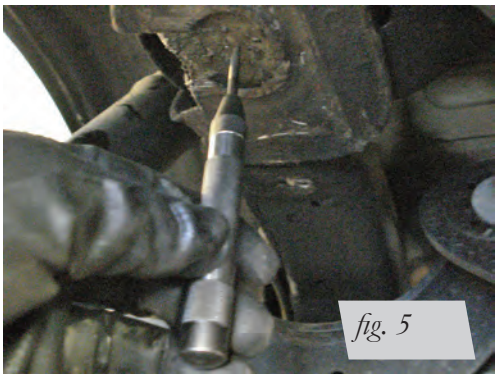
fig. 5

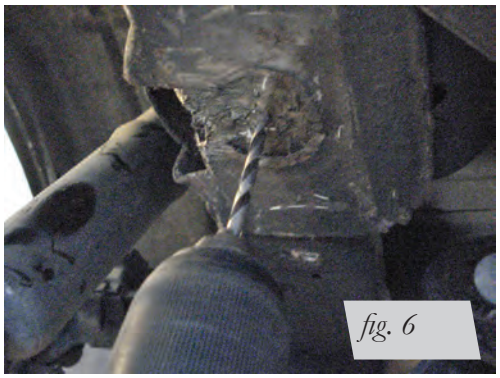
fig. 6

2. Assemble the rivet nut and rivet nut tool together and insert into the 17/32” hole. Review diagram below on how to attach the rivet nut to the vehicle. (Fig. 7)

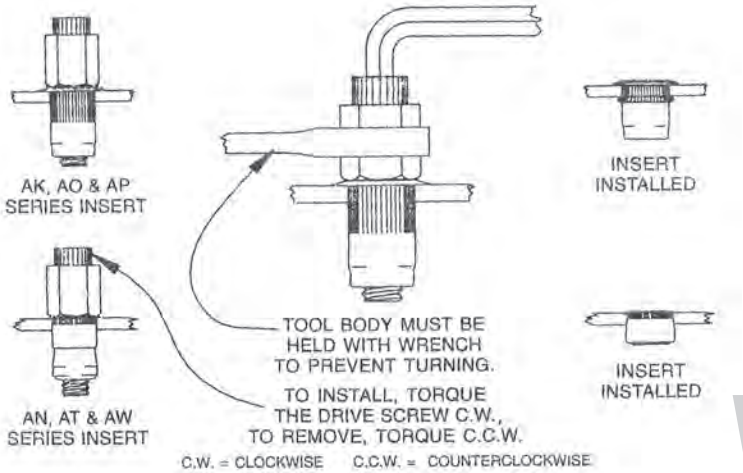

fig. 7

3. Two lengths of threaded studs are included with the kit (C or D, Fig. 1). The shorter stud is for vehicles that retain the coil spring perch bump. The longer threaded stud is for vehicles without the spring perch bump. Apply thread-locking compound to the threads of the upper end cap and thread in the appropriate stud. Take the supplied nuts and thread both onto one stud (Figs. 8 and 9). Using the nuts jammed together, tighten the stud into the end cap until it bottoms (Fig. 10). Remove both nuts (Fig. 11).

fig. 8

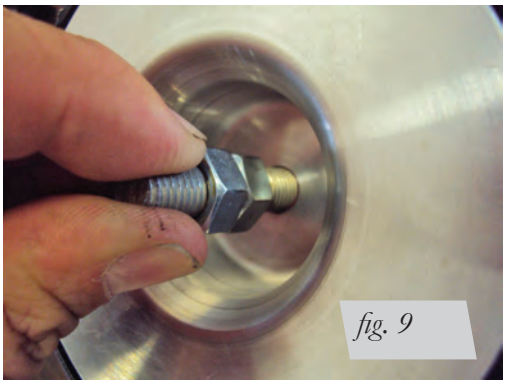
fig. 9

fig. 10

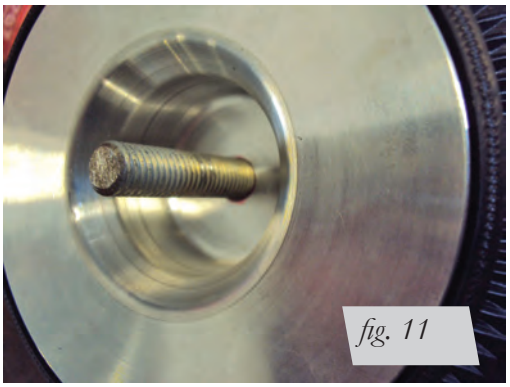
fig. 11

4. Wrap the threads of the fitting with thread sealant. Tighten the fitting 1 3/4 turns beyond hand tight.
5. Thread the air spring into the rivet nut. Tighten by hand (Figs. 12, 13 for a factory shock, Figs. 14, 15 for an aftermarket shock).

Installation With Factory Shock

fig. 12

fig. 13

Previously Cut Spring Perch with Aftermarket Shock

fig. 14

fig. 15

6. Orient the air fitting inline with lower transverse link toward the center of the vehicle.
7. The lower bracket in this kit has a scribe line. This indicates the height the bracket should be if using Air Lift rear shocks or shocks that allow for more drop than the factory shock absorbers with half cut jounce bumpers.

⚠ CAUTION

IF RUNNING A SHORTER-THAN-FACTORY SHOCK, THE BRACKET MUST BE TRIMMED DOWN TO PREVENT THE AIR SPRING FROM BEING OVER COMPRESSED AND POTENTIALLY CAUSING A RUPTURE.

8. Attach the lower bracket and roll plate with the lock washer and bolts provided. The roll plate is used with the full length lower bracket. Roll plates are not used with a cut bracket. (See Figs. 16-18 for installation with a factory shock, Figs. 19-22 for aftermarket shock.)

Installation with factory shock, roll plate and un-cut lower bracket

fig. 16

fig. 17

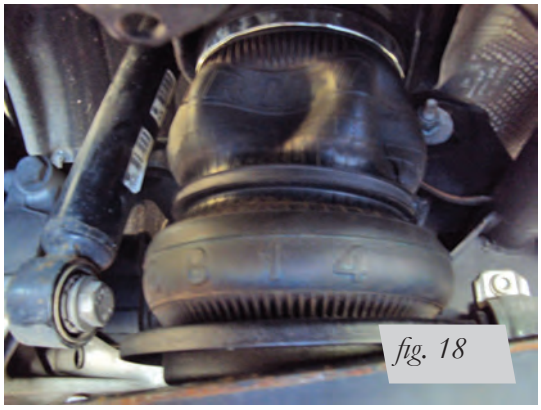
fig. 18

Installation with aftermarket shock, no roll plate and cut bracket

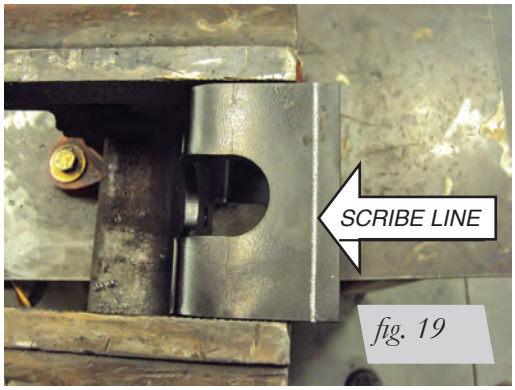

fig. 19

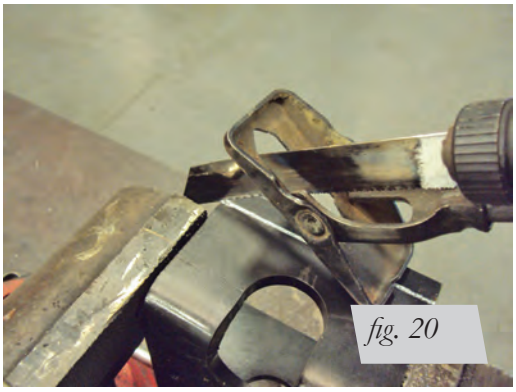
fig. 20

Installation with aftermarket shock, no roll plate and cut bracket (cont'd)

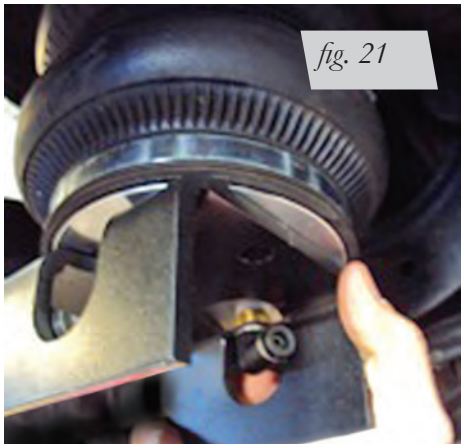
fig. 21

fig. 22

9. Route the air line from the center of the cross-member, through the lower transverse link and attach insert into the air fitting (Fig. 23).

fig. 23

10. Reattach the lower transverse link to the hub. Do not torque at this time (Fig. 24).

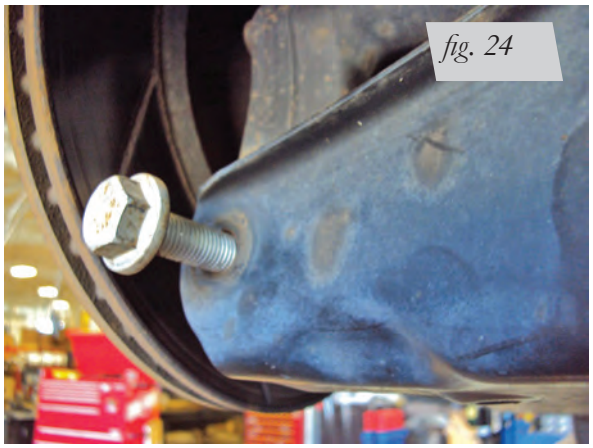
fig. 24

NOTE

If the lower bracket has been cut, the shorter length bolt should be used to secure the assembly to the lower transverse link with the centering washer and lock washer. Uncut brackets use the longer bolt (C or D, Fig. 1) (Fig. 25).

fig. 25

ROUTING THE AIR LINES

1. Fully compress the suspension using a jack. With the suspension compressed, review the best routing for the air line that is clear of all suspension components and axle.
2. Routing should also allow for the suspension to extend without kinking or pulling the line tight or rubbing on other components. Following the brake line routing is often a good place to start. Check clearances to all other components.

Before Operating

SETTING THE RIDE HEIGHT

1. With the suspension fully compressed, take a measurement from the fender to a chosen reference point – typically the center of the axle. Record this measurement as max compression (MC).
2. Cycle the suspension to max extension (ME) and record the measurement from the fender to the same reference point.
3. Add ME and MC, then divide the total by 2. Set the suspension to this point. This position will give 50% stroke in either direction and is a starting point for ride height (Fig. 26).

Formula for Calculating Ride Height
(ME+MC)÷2=MID STROKE

fig. 26

4. With the suspension at this position, torque the transverse link to wheel bearing housing and lower shock mount to manufacturer's specifications (Table 1):

Torque Specifications		
Location	Nm	Lb.-ft.
Transverse link to wheel bearing housing	90	66
Transverse link to subframe (toe adjustment)	95	70
Upper control arm to subframe (camber adjustment)	95	70
Upper control arm to wheel bearing housing	130+90°	96+90°
Trailing arm to mounting bracket	90+90°	66+90°
Shock upper mount	45+45°	33+45°
Shock to wheel bearing housing	180	133
Wheels	120	89
Air spring to lower bracket	27	20

Table 1

Suggested Driving Air Pressure	Maximum Air Pressure
40-70 PSI	**125 PSI**
FAILURE TO MAINTAIN ADEQUATE MINIMUM PRESSURE (OR PRESSURE PROPORTIONAL TO LOAD) MAY RESULT IN EXCESSIVE BOTTOMING OUT AND **WILL VOID THE WARRANTY**.	

Table 2

CHECK FOR BINDING

1. Inflate and deflate the system (do not exceed 125 PSI) to check for clearance or binding issues. With the air springs deflated, check clearances on everything so as not to pinch brake lines, vent tubes, etc. Clear lines if necessary.
2. Inflate the air springs to 75-90 PSI and check all connections for leaks.
3. Please continue by reading the Product Use, Maintenance and Servicing section.

CAUTION MAKE SURE THE FRONT WHEELS ARE STRAIGHT WHEN DEFLATING AND REINFLATING AIR BAGS.

ALIGNING THE VEHICLE

1. Set the vehicle to the height at which it will most often be driven.
2. If the ride height is lower than stock, Air Lift recommends loosening all pivot points (bolts, nuts) on any control arm, strut arm or radius rod that contains bushings. Once they have been loosened, re-torque to stock specifications (Table 1).

NOTE *It may be necessary to cycle the suspension to loosen the bushing from its mount. This will help re-orient the bushing at its new position based on the chosen ride height.*

3. Get a shop alignment of the vehicle at the new chosen ride height.

INSTALLATION CHECKLIST

- ☐ **Clearance** — Inflate the air springs to 75-90 PSI and make sure there is at least 1/2" clearance from anything that might rub against the air spring. This should be checked with the air spring fully inflated and fully deflated.

- ☐ **Leak** — Inflate the air springs to 75-90 PSI and check all connections for leaks. All leaks must be eliminated before the vehicle is road tested.

- ☐ **Heat** — Be sure there is sufficient clearance from heat sources, at least 6" for air springs and air lines. If a heat shield was included in the kit, install it. If there is no heat shield, but one is required, call Air Lift customer service at **(800) 248-0892**.

- ☐ **Fastener** — Recheck all bolts for proper torque.

- ☐ **Road** — Inflate the springs to recommended driving pressures. Drive the vehicle 10 miles and recheck for clearance, loose fasteners and air leaks.

- ☐ **Operating instructions** — If professionally installed, the installer should review the operating instructions with the owner. Be sure to provide the owner with all paperwork that came with the kit.

POST-INSTALLATION CHECKLIST

- ☐ **Overnight leak down test** — Recheck air pressure 24 hours after installation and driving of the vehicle. If the pressure has dropped more than 5 PSI, there is a leak that must be fixed.

- ☐ **Air pressure requirements** — It is important to understand the air pressure requirements of the air spring system. Regardless of load, the air pressure should always be adjusted to maintain adequate ride height at all times while driving.

- ☐ **Thirty-day or 500-mile test** —Recheck the air spring system after 30 days or 500 miles, whichever comes first. If any part shows signs of rubbing or abrasion, the source should be identified and moved, if possible. If it is not possible to relocate the cause of the abrasion, the air spring may need to be remounted. If professionally installed, the installer should be consulted. Check all fasteners for tightness.

Use, Maintenance and Servicing

1. An Air Lift air management system is strongly recommended for this product, but it is possible to operate without one. The air lines can be routed to Schrader valves for use with a separate air compressor. Air lines and Schrader valves are not included with Air Lift Performance kits and would need to be purchased separately. To learn more Air Lift management systems visit **air-lift.co/productlines**.
2. Check the air pressure before driving.

⚠ CAUTION

SHOULD IT BECOME NECESSARY TO RAISE THE VEHICLE BY THE FRAME, MAKE SURE THE CONTROL SYSTEM IS TURNED OFF BEFORE LIFTING.

TUNING THE AIR PRESSURE

Pressure determination comes down to three things — level vehicle, ride comfort and stability.

1. **Level vehicle**

   Depending on load, it is possible one side will need more pressure than the other to level the vehicle.

2. **Ride comfort**

   If the vehicle has a harsh ride, it may be due to either too much pressure or not enough causing frequent bottoming. Also, riding the vehicle at the top, or close to the top of the available stroke will cause a very uncomfortable ride due to a lack of rebound travel. This situation should be avoided for driving any significant distance. Try different pressures to determine the best ride comfort. See Air Lift suggested driving air pressure for this vehicle (Table 2).

3. **Stability**

   Stability translates into safety and should be the priority, meaning the driver may need to sacrifice a perfectly level and comfortable ride. Stability issues include roll control, bounce, dive during braking and sponginess. Tuning out these problems usually requires additional air pressure, damping or both.

Troubleshooting Guide

PROBLEM	CAUSE	SOLUTION
Air spring won't maintain pressure.	Leak at fitting, air line not cut properly or damage to air line during installation.	Find location of leak by spraying listed components with soapy water solution and look for bubbles. Tighten air fitting, re-cut air line or replace damaged components.
	Leak at lower O-ring on damper if air spring is over the damper.	Spray bottom of air spring with soapy water solution and look for bubbles. Contact Air Lift customer service at **(800) 248-0892** to determine if component should be replaced.
Knocking noise when hitting bumps.	Loose suspension component such as locking collar on damper.	Tighten lower locking collar with significant force, check and tighten suspension components to factory specs at desired ride height.
	Driving vehicle too close to maximum extension.	Check current ride height and compare to maximum height. If there is less than 1" (25mm) difference, reduce air pressure to lower ride height.
		Lengthen strut or shock to increase available up travel.
Suspension bottoms out.	Air pressure is too low, causing air springs to bottom out.	Raise air pressure.
The ride is too bouncy.	Air pressure is too high, causing air springs to be too stiff.	Lower air pressure and adjust damper length if necessary to achieve proper ride height.
	Damping is inadequate.	Increase damping with adjusters.
The ride is too soft or floaty.	Damping is inadequate.	
The ride is too harsh.	Excessive damping.	Reduce damping with adjusters.

TIPS FOR INSTALLING AIR LINES

When cutting air lines, use a sharp knife or a hose cutter and make clean, square cuts (Fig. 27). Do not use scissors or wire cutters because these tools will deform the air line, causing it to leak around fittings. Do not cut the lines at an angle.

Do not bend the 1/4” hose at a radius of less than 1” and do not put side load pressure on fitting. The hose should be straight beyond the fitting for 1” before bending.

Inspect hose for scratches that run lengthwise on hose prior to installation. Contact Air Lift customer service at **(800) 248-0892** if the air line is damaged.

To watch a video demonstrating proper air line cutting, go to air-lift.co/cuttingairline

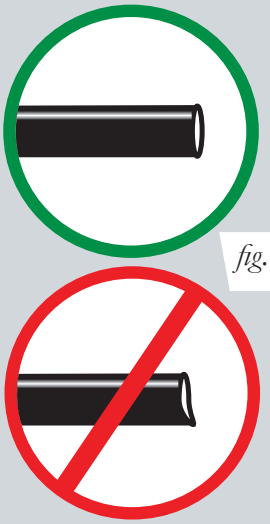

fig. 27

CHECKING FOR LEAKS

1. Inflate the air spring to at least 80 PSI.
2. Spray all connections with a solution of 1/5 liquid dish soap and 4/5 water. Spot leaks easily by looking for bubbles in the soapy water.
4. Check the air pressure again after 24 hours. A 2-4 PSI loss after initial installation is normal. Retest for leaks if the loss is more than 5 PSI.

FIXING LEAKS

1. **Air line to PTC fitting**: Try pushing the air line firmly into the fitting to ensure it is properly seated. If leak persists, deflate the spring and remove the air line by pushing the collar toward the fitting body and pulling firmly on the air line. Trim 1” off the end of the air line making sure the cut is clean and square. Reinsert air line firmly into fitting and pull back on the air line to make sure it is seated.
2. **Threaded connection**: If possible, tighten the fitting another half turn. If the leak persists, deflate spring, remove fitting and re-coat threads with thread sealant. Reinstall to hand tight and then use wrench to finish tightening an additional 1 3/4 turns.
3. **Air spring O-ring seal**: If a leak is found at the upper or lower air spring seal on a strut or shock, contact Air Lift customer service at **(800) 248-0892.**

Limited Warranty and Return Policy

WHAT THIS WARRANTY COVERS

Air Lift Company, for all Air Lift Performance products, except its Air Lift Performance 3H™ and 3P™ systems, warrants to the original purchaser for a period of one year from the date of original purchase that the Air Lift Performance damper kits will be free from defects in workmanship and materials for the normal expected life of the part when used on cars and trucks as specified by Air Lift Company and under normal operating conditions, subject to the requirements and exclusions set forth below.

Air Lift Company provides a Limited Lifetime Warranty to the original purchaser of its Air Lift Performance 3H™ and 3P™ Control/Air Management Systems, that the Air Lift Performance products will be free from defects in workmanship and materials for the normal expected life of the part when used on cars and trucks as specified by Air Lift Company and under normal operating conditions, subject to the requirements and exclusions set forth below.

WHAT THIS WARRANTY DOES NOT COVER

The warranty does not apply to products that have been improperly applied, improperly installed, or which have not been maintained in accordance with installation instructions furnished with all products. This warranty does not apply and is void if damage or failure is caused by: accident, abuse, misuse (including but not limited to racing or off-road activities or commercial use), abnormal use, faulty installation, liquid contact, fire, earthquake or other external cause; operating the product outside Air Lift Company's instructions, specifications or guidelines; or service, alteration, maintenance or repairs performed by anyone other than Air Lift Company to the product from its purchased condition. This warranty also does not apply to: Universal Air (Fabricator Kits), consumable parts, such as batteries; cosmetic damage, including but not limited to scratches or dents; defects caused by normal wear and tear or otherwise due to the normal aging of the product, or if any serial or identification number has been removed or defaced from the product. Air Lift Company reserves the right to change the design of any product without assuming any obligation to modify any product previously manufactured.

LIMITATION OF LIABILITY

To the extent permitted by law, this warranty and the remedies set forth herein are exclusive and in lieu of all other warranties, remedies and conditions, whether oral, written, statutory, express or implied. AIR LIFT COMPANY DISCLAIMS ALL STATUTORY AND IMPLIED WARRANTIES, INCLUDING WITHOUT LIMITATION, WARRANTIES OF MERCHANTABILITY AND FITNESS FOR A PARTICULAR PURPOSE AND WARRANTIES AGAINST HIDDEN OR LATENT DEFECTS TO THE EXTENT PERMITTED BY LAW. To the extent such warranties cannot be disclaimed, such implied warranties shall apply only for the warranty period specified above. Please note that some states do not allow limitation on how long an implied warranty (or condition) lasts. So the above limitation may not apply to you.

Except as provided in this warranty and to the extent permitted by law, Air Lift Company shall not be liable for any direct, special, incidental or consequential damages resulting from any breach of warranty or condition, or arising in connection with the sale, use or repair of air lift products, or under any other legal theory, including but not limited to loss of use, loss of revenue, loss of actual or anticipated profits, loss of the use of money, loss of business, loss of opportunity, loss of goodwill, and loss of reputation. Air Lift Company's maximum liability shall not in any case exceed the purchase price paid by you for the Air Lift product. Please note that some states do not allow the exclusion or limitation of incidental or consequential damages, so the above limitation or exclusion may not apply to you.

HOW TO GET SERVICE

If a defect in workmanship or materials causes your Air Lift Performance product to become inoperable within the warranty period, before returning any defective product, call Air Lift Company at (800) 248-0892 in the U.S. and Canada (elsewhere, (517) 322-2144) to obtain a Returned Materials Authorization (RMA) number. The consumer shall be responsible for removing (labor charges) the defective product from the vehicle and returning it, shipping costs prepaid, to Air Lift Company for verification. Returns to Air Lift Company must be postage prepaid and sent to: Air Lift Company • 2727 Snow Road • Lansing, MI • 48917. You must prove to the satisfaction of Air Lift Company the date of original purchase of your Air Lift Performance product. You must also enclose the RMA number and a return address. A minimum $10 shipping and handling charge will apply to all warranty claims. You must also pack the product to minimize the risk of it being damaged in transit. If we receive a product in damaged condition as the result of shipping, we will notify you and you must seek a claim with the shipper.

WHAT AIR LIFT COMPANY WILL DO

If you submit a valid claim to Air Lift Company during the warranty period, Air Lift Company will, at its option, repair your Air Lift Performance product or furnish you with a new or rebuilt product. Air Lift Company will not reimburse you for repairs or replacement parts provided by other parties. Your repaired or replacement Air Lift Performance product will be returned to you (subject to payment of the required warranty claim shipping and handling charge) and it will be covered under the warranty for the balance of the warranty period, if any. When a product or part is replaced, any replacement item becomes your property and the replaced item becomes property of Air Lift Company. You are responsible for installation/reinstallation (labor charges) of the product.

HOW THE LAW RELATES TO THIS WARRANTY

This warranty gives you specific legal rights and you may also have other rights which vary from state to state. By this warranty, Air Lift Company does not limit or exclude your rights except as allowed by law. To fully understand your rights, you should consult the laws of your state.

Replacement Part Information

If replacement parts are needed, contact the local dealer or call Air Lift customer service at **(800) 248-0892**. Most parts are immediately available and can be shipped the same day.

Contact Air Lift Company customer service at (800) 248-0892 first if:

- Parts are missing from the kit.
- Need technical assistance on installation or operation.
- Broken or defective parts in the kit.
- Wrong parts in the kit.
- Have a warranty claim or question.

Contact the retailer where the kit was purchased:

- If it is necessary to return or exchange the kit for any reason.
- If there is a problem with shipping if shipped from the retailer.
- If there is a problem with the price.

Contact Information

Mailing address	P.O. Box 80167 Lansing, MI 48908-0167
Shipping address for returns	2727 Snow Road Lansing, MI 48917
Phone	Toll free: (800) 248-0892 International: (517) 322-2144
Email	service@airliftcompany.com
Web address	www.airliftcompany.com

Need Help?

Contact Air Lift Company customer service department by calling (800) 248-0892. For calls from outside the USA or Canada, dial (517) 322-2144.

Connect by searching for **Air Lift Performance** *#LifeonAir*

Thank you for purchasing Air Lift Performance products!

Air Lift Performance • 2727 Snow Road • Lansing, MI 48917 or P.O. Box 80167 • Lansing, MI 48908-0167
Toll Free (800) 248-0892 • Local (517) 322-2144 • Fax (517) 322-0240 • www.airliftperformance.com

Printed in the USA
JJC-1116