Air Lift™ PERFORMANCE

Kit 78522

Volkswagen MKVII

Front Application

(for vehicles with 55mm lower strut diameter)

AIR LIFT PERFORMANCE™

INSTALLATION GUIDE

For maximum effectiveness and safety, please read these instructions completely before proceeding with installation.

Failure to read these instructions can result in an incorrect installation.

MN-942 • (011411) • ERN 8035

TABLE OF CONTENTS

Introduction 2
Notation Explanation 2
Important Safety Notices 2

Installation Diagram 3
Hardware List 3

Installing the Air Suspension 4
Preparing the Vehicle 4
Removing the Front Suspension 4
Air Suspension Installation 8
Damping Adjustment 11
Aligning the Vehicle 11
Adjusting Extended or Drop Height Using Lower Mount 12

Before Operating 14
Installation Checklist 14

Product Use, Maintenance and Servicing 15
Suggested Driving and Maximum Air Pressures 15
Maintaining and Operating 15

Troubleshooting Guide 15

Frequently Asked Questions 15

Tuning the Air Pressure 16

Checking for Leaks 16

Fixing Leaks 16

Warranty & Return Policy 17

Replacement Information 17

Contact Information 17

Introduction

The purpose of this publication is to assist with the installation, maintenance and troubleshooting of this Volkswagen MKVII Performance kit.

It is important to read and understand the entire installation guide before beginning installation or performing any maintenance, service or repair. The information includes a hardware list, step-by-step installation information, maintenance tips, safety information and a troubleshooting guide.

Air Lift Performance reserves the right to make changes and improvements to its products and publications at any time. For the latest version of this manual, contact Air Lift Performance at (800) 248-0892 or visit our website at www.airliftperformance.com.

NOTATION EXPLANATION

Hazard notations appear in various locations in this publication. Information which is highlighted by one of these notations must be observed to help minimize risk of personal injury or possible improper installation which may render the vehicle unsafe. Notes are used to help emphasize areas of procedural importance and provide helpful suggestions. The following definitions explain the use of these notations as they appear throughout this guide.

⚠ DANGER INDICATES IMMEDIATE HAZARDS WHICH WILL RESULT IN SEVERE PERSONAL INJURY OR DEATH.

⚠ WARNING INDICATES HAZARDS OR UNSAFE PRACTICES WHICH COULD RESULT IN SEVERE PERSONAL INJURY OR DEATH.

⚠ CAUTION INDICATES HAZARDS OR UNSAFE PRACTICES WHICH COULD RESULT IN DAMAGE TO THE MACHINE OR MINOR PERSONAL INJURY.

NOTE *Indicates a procedure, practice or hint which is important to highlight.*

IMPORTANT SAFETY NOTICES

The installation of this kit does not alter the Gross Vehicle Weight Rating (GVWR) or payload of the vehicle. Check your vehicle's owner's manual and do not exceed the maximum load listed for your vehicle.

Gross Vehicle Weight Rating: The maximum allowable weight of the fully loaded vehicle (including passengers and cargo). This number—along with other weight limits, as well as tire, rim size and inflation pressure data—is shown on the vehicle's Safety Compliance Certification Label.

Payload: The combined, maximum allowable weight of cargo and passengers that the vehicle is designed to carry. Payload is GVWR minus the Base Curb Weight.

⚠ WARNING DO NOT INFLATE AIR SPRINGS WHILE OFF OF THE VEHICLE. DAMAGE TO ASSEMBLY MAY RESULT AND VOID WARRANTY.

⚠ CAUTION DO NOT WELD TO, OR MODIFY PERFORMANCE STRUTS/SHOCKS IN ANY WAY. DAMAGE TO UNIT MAY OCCUR AND WILL VOID WARRANTY.

Installation Diagram

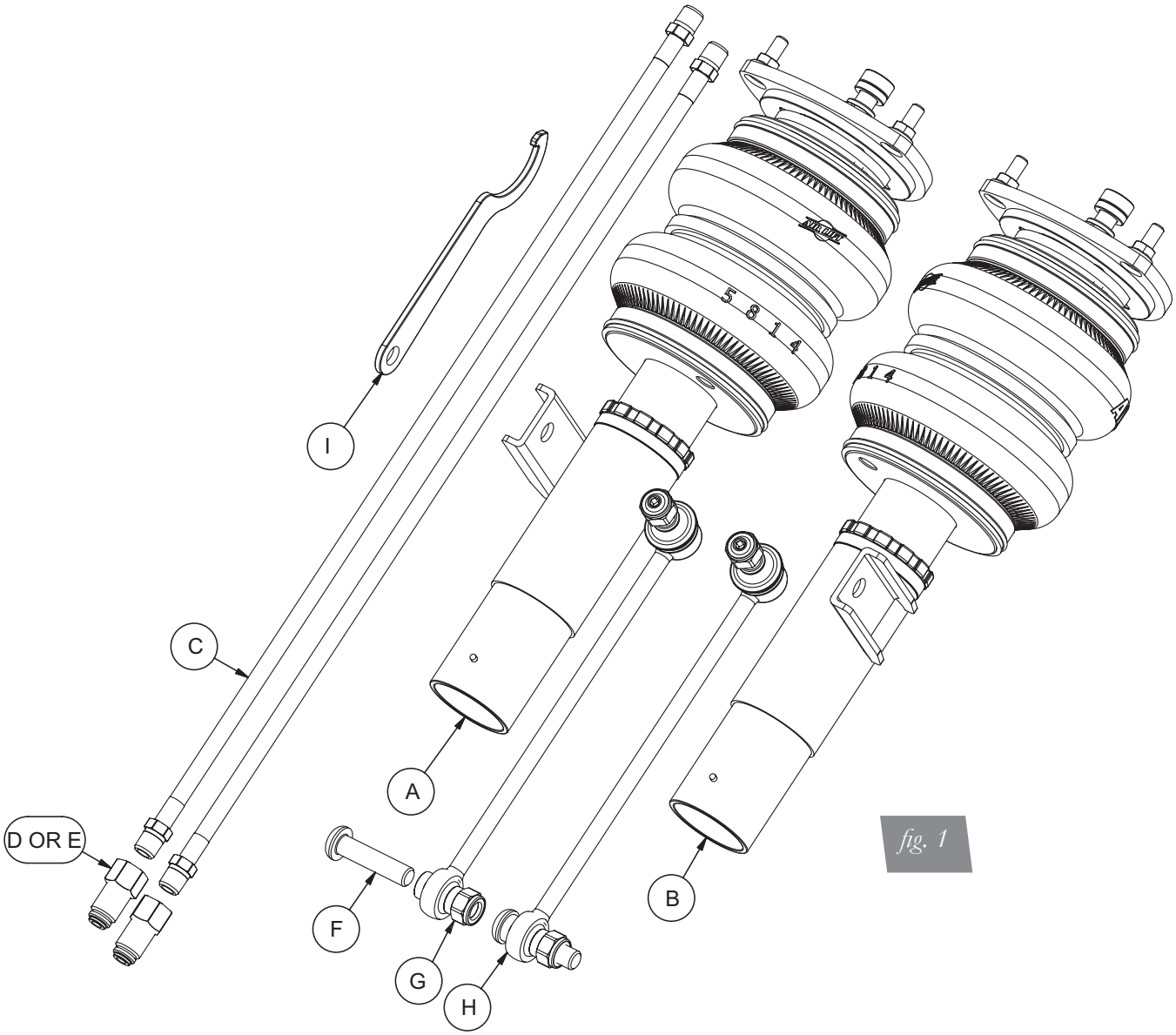

fig. 1

HARDWARE LIST

Item	Part #	Description	Qty
A	35310	ASM, Strut, MKVII Front (55mm) Right	1
B	35311	ASM, Strut, MKVII Front (55mm) Left	1
C	20997	Leader Hose, 1/4” ID	2
D	21987	Union, 1/4”FNPT X 3/8” PTC, DOT	2
E	21810	Union, 1/4”FNPT X 1/4” PTC, DOT	2
F	17491	Male 12x1.25-50 Button Head Cap Screw	2
G	18546	Nyloc Nut	2
H		End Link, VW MKVII Front	2
I		Spanner Wrench	1

STOP! Missing or damaged parts? Call Air Lift customer service at (800) 248-0892 for a replacement part.

Installing the Air Suspension

PREPARING THE VEHICLE

1. Elevate and support the vehicle with a hoist or jack stands.
2. Remove the front wheel and support the hub assembly (fig. 2).

fig. 2

REMOVING THE FRONT SUSPENSION

1. Within the engine compartment, remove the weather-stripping from the plastic cowl cover (figs. 3 and 4).

fig. 3

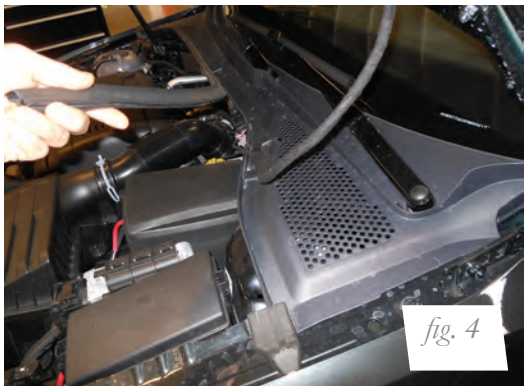

fig. 4

2. Remove both wiper arms (figs. 5a-5c).

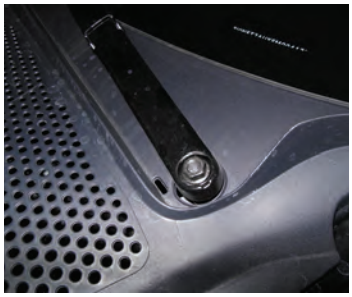

fig. 5a

fig. 5b

fig. 5c

3. Unclip the hose from the cowl cover and remove both sections of cover from the vehicle (figs. 6a-6d).

fig. 6a

fig. 6b

fig. 6c

fig. 6d

4. Remove the stabilizer bar end link from the strut and bar (figs. 7a-d).

fig. 7a

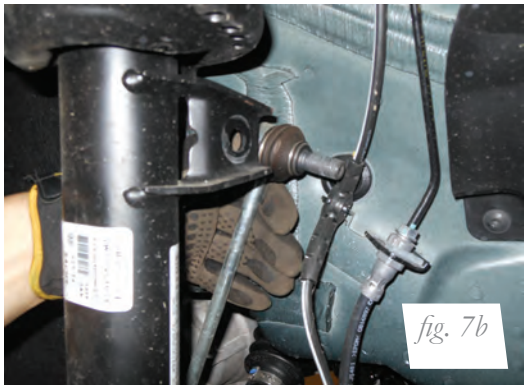
fig. 7b

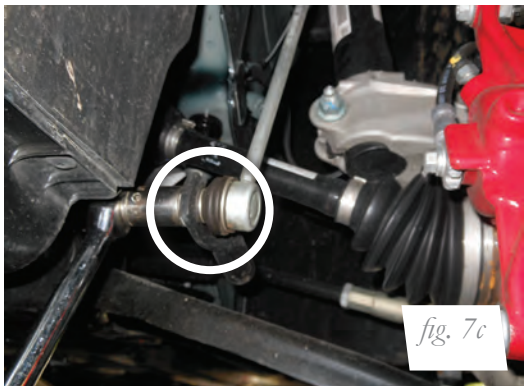
fig. 7c

fig. 7d

5. Remove the axle bolt from the bearing hub (figs. 8a and 8b).

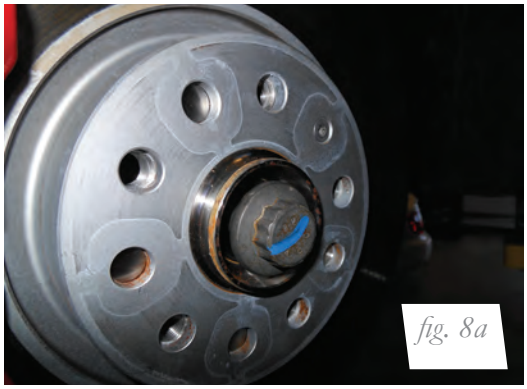
fig. 8a

fig. 8b

6. Remove the lower strut pinch bolt (fig. 9).

fig. 9

7. Support the hub assembly and remove the three lower ball joint bolts (fig. 10).

fig. 10

8. Rotate the hub and remove the axle from the bearing. Support the axle and slide the hub down from the strut (fig. 11).

fig. 11

9. Unbolt the three upper strut mount bolts and remove the strut from the vehicle (figs. 12a and 12b).

fig. 12a

fig. 12b

10. Insert the axle through the bearing (fig. 13a), reattach the axle bolt and three lower ball joint nuts (fig. 13b). Torque ball joint nuts to 60Nm (44 ft-lbs.) Thread the axle bolt in place (fig. 13c). See Torque Specifications for axle bolt values.

fig. 13a

fig. 13b

fig. 13c

AIR SUSPENSION INSTALLATION

1. Install the braided air line into the air spring (fig. 14) with thread sealant, torque one and three-quarter turns beyond hand-tight. Attach the desired air fitting to the braided air line with thread sealant, torque one and three-quarter turns beyond hand-tight.

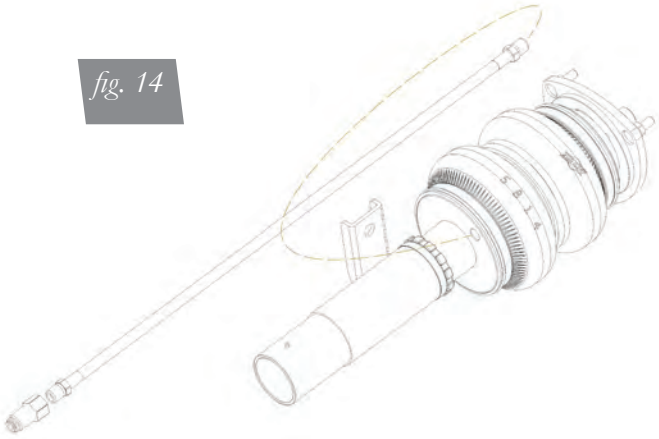

fig. 14

2. Attach the strut camber plate to the chassis (fig 15b). Torque nuts to 27Nm (20 ft-lbs.)

fig. 15a

fig. 15b

3. Lift the hub assembly, sliding over the strut lower mount with the locating pin between the clamp area (fig. 16a). With the lower mount fully seated (fig. 16b), install the lower clamp bolt (fig. 16c). Torque to 70Nm (52 ft-lbs.).

fig. 16a

fig. 16b

fig. 16c

4. Insert the supplied bolt (F) through the stabilizer bar with the bolt head inboard toward the engine compartment. Slide the supplied end link (G) with spacer on each side of the rod end onto the bolt. Thread the nut onto the bolt and torque to 65Nm (48 ft-lbs.) (fig. 17).

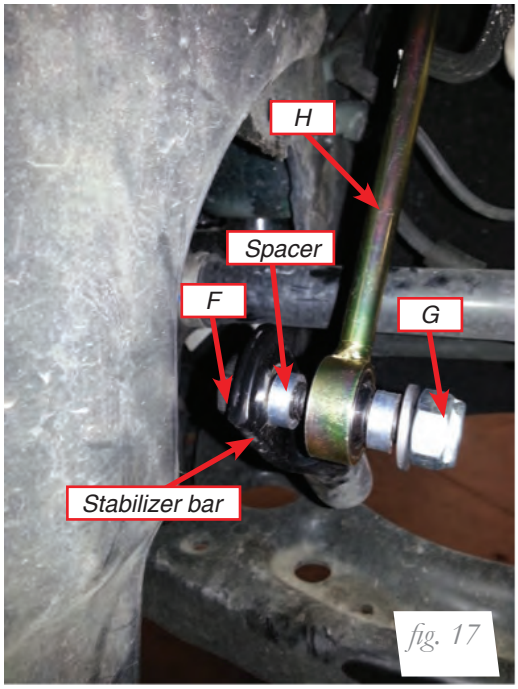

fig. 17

5. Attach the end link stud to the endlink tab on the strut (fig. 18). Torque to 65Nm (48 ft-lbs.)

fig. 18

6. Fully compress the suspension using a jack. With the suspension compressed, review the best routing for the leader hose that is clear of all suspension components and axle. Routing should also allow for the suspension to extend without kinking or pulling the line tight or rubbing on other components. Following the brake line routing is often a good place to start. Check clearances to all other components.
7. With the suspension fully compressed, take a measurement from the fender to some reference point – typically the center of the axle. Record this measurement as Max Compression.
8. Cycle the suspension to Max Extension and record the measurement from the same reference points.
9. Add ME and MC then divide by 2. Set the suspension to this point. This position will give 50% stroke in either direction and is a starting point for ride height (fig. 19).

Formula for Calculating Ride Height
(ME+MC)÷2=MID STROKE

fig. 19

10. With the suspension at this position, loosen and then re-torque the forward control arm to sub-frame bolt to manufacturer's specifications (Table 1).

Torque Specifications		
Location	Nm	lb-ft
Camber plate to chassis	27	20
Lower strut clamp bolt	70	52
Stabilizer end link to bar	65	48
Stabilizer end link to strut	65	48
Camber adjustment bolt	15	11
Ball joint to control arm	60	44
Axle bolt (12 point without ribs)	200	148
Axle bolt (12 point with ribs)	70 + 90 degrees	52 + 90 degrees
Forward control arm to sub-frame bushing bolt	70 + 180 degrees	52 + 180 degrees
Wheel studs	120	89
Braided air line threads	1 and 3/4 turns beyond hand tight	

Table 1

DAMPING ADJUSTMENT

The struts in this kit have 30 settings, or “clicks”, of adjustable compression and rebound damping characteristics. Damping is changed through the strut rod using the supplied adjuster (figs. 20 and 21) or a 3mm allen wrench.

Turn the adjuster clockwise and the damping settings are hardened. Turn the adjuster counterclockwise and the damping is softened.

Each shock is preset to “-15 clicks”. This means that the shock is adjusted 15 clicks away from full stiff. Counting down from full stiff is the preferred method of keeping track of, or setting, damping. This setting was developed on a 2015 Volkswagen Golf GTI and may need to be adjusted to different vehicles and driving characteristics.

fig. 20

fig. 21

ALIGNING THE VEHICLE

1. Using the control system, set the vehicle height to the new custom ride height.
2. If the custom ride height is lower than stock, we recommend loosening all pivot points (bolts, nuts) on any control arm, strut arm or radius rod that contains bushings. Once they have been loosened, re-torque to stock specifications.

NOTE

It may be necessary to cycle the suspension to loosen the bushing up from its mount. This will help re-orient the bushing at its new position and increase life of the bushings based on the custom ride height.

ADJUSTING EXTENDED OR DROP HEIGHT USING LOWER MOUNT

Your struts have been pre-set at the factory to provide maximum drop height while maintaining adequate tire clearance to the air spring. If you wish to gain more extended height (lift), which is the same as reducing drop height, or want to lower the chassis further and there is still adjustment available at the lower mount, please use the following procedure:

1. Support the vehicle with jack stands or a hoist at approved lifting points.
2. Remove the wheel.
3. Using the supplied spanner wrench, loosen the lower locking collar (fig. 22).

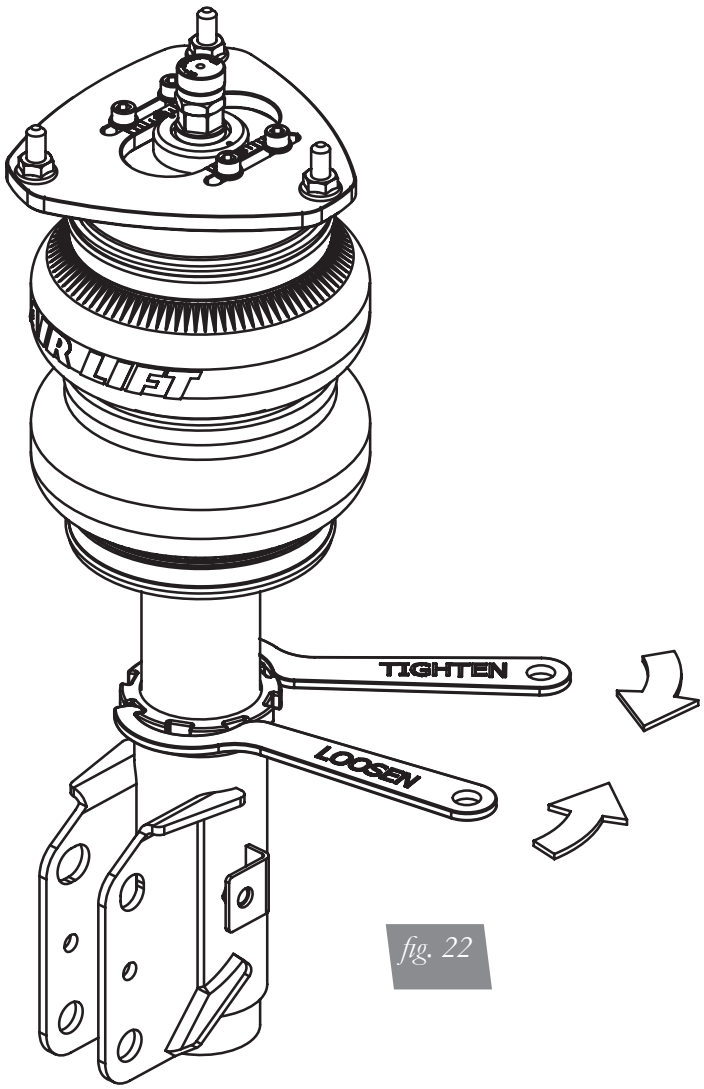

fig. 22

4. Deflate the air spring to 0 PSI on the corner you are adjusting.
5. Disconnect lower mount from suspension.
6. Spin the lower mount to the desired location.

NOTE

Not all models will have further drop height available.

7. Re-install lower mount to suspension and torque fasteners.
8. Tighten the lower locking collar to the lower mount using significant force.

⚠ CAUTION WHEN ADJUSTING HEIGHT UPWARDS, MAKE SURE THAT THE STRUT BODY ENGAGES ALL THE THREADS OF THE LOWER MOUNT (FIG. 23). WHEN ADJUSTING DOWNWARDS, MAKE SURE THERE IS ADEQUATE AIR SPRING CLEARANCE TO THE TIRE/WHEEL ASSEMBLY. CLEARANCE MUST BE CHECKED WITH SYSTEM FULLY DEFLATED AS WELL AS FULLY INFLATED TO ENSURE THAT NO RUBBING OCCURS. FAILURE TO MAINTAIN ADEQUATE CLEARANCE CAN RESULT IN AIR SPRING FAILURE AND WILL NOT BE COVERED UNDER WARRANTY.

⚠ CAUTION DO NOT ADJUST HEIGHT BY SPINNING AIR SPRING ON STRUT! DOING SO MAY CAUSE AN AIR LEAK AND COMPROMISE THE ASSEMBLY.

FOR STRUTS:

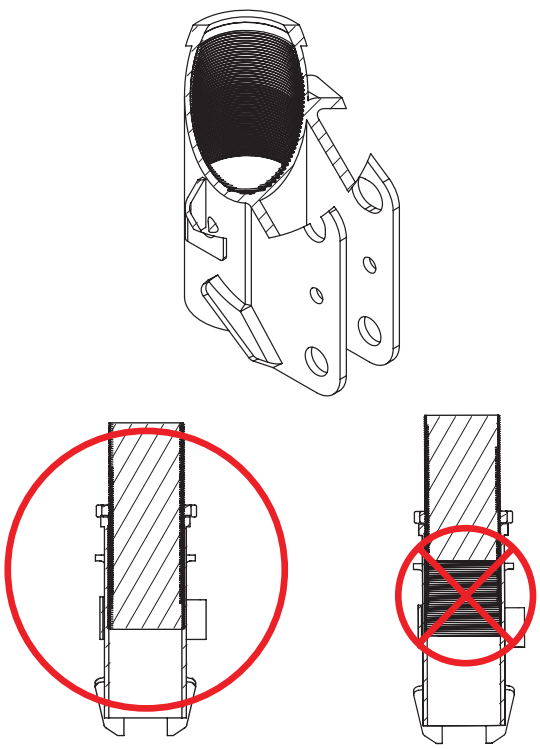

OK, no threads showing.

Not OK, threads are showing.

FOR SHOCKS:

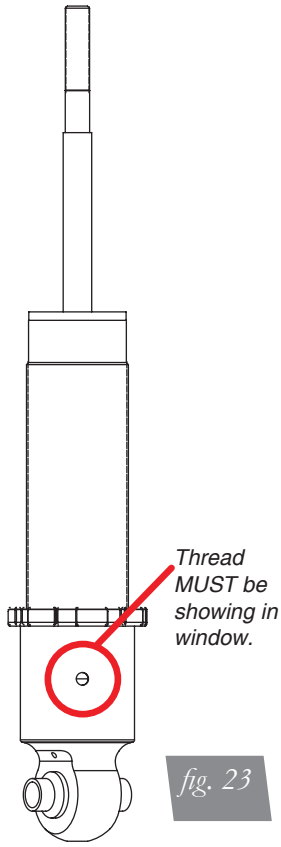

fig. 23

Before Operating

CAUTION MAKE SURE THE FRONT WHEELS ARE STRAIGHT WHEN DEFLATING AND REINFLATING AIR BAGS.

1. Inflate and deflate the system (do not exceed 125 PSI) to check for clearance or binding issues. With the air springs deflated, check clearances on everything so as not to pinch brake lines, vent tubes, etc. Clear lines if necessary.
2. Inflate the air springs to 75-90 PSI and check all connections for leaks.
3. Air Lift part #27669 or #27671, AutoPilot V2 Air Management System, is highly recommended for this product.
4. Please familiarize yourself further with this product by reading the Product Use, Maintenance and Servicing section.

INSTALLATION CHECKLIST

- ❑ Clearance test — Inflate the air springs to 75-90 PSI and make sure there is at least a half-inch of clearance from anything that might rub against each sleeve. Be sure to check the tire, brake drum, frame, shock absorbers and brake cables.
- ❑ Leak test before road test — Inflate the air springs to 75-90 PSI and check all connections for leaks. All leaks must be eliminated before the vehicle is road tested.
- ❑ Heat test — Be sure there is sufficient clearance from heat sources, at least 6” for air springs and air lines. If a heat shield was included in the kit, install it. If there is no heat shield, but one is required, call Air Lift customer service at (800) 248-0892.
- ❑ Fastener test — Recheck all bolts for proper torque.
- ❑ Road test — The vehicle should be road-tested after the preceding tests. Inflate the springs to recommended driving pressures. Drive the vehicle 10 miles and recheck for clearance, loose fasteners and air leaks.
- ❑ Operating instructions — If professionally installed, the installer should review the operating instructions with the owner. Be sure to provide the owner with all of the paperwork that came with the kit.

Technician’s Signature _____

Date _____

POST-INSTALLATION CHECKLIST

- ❑ Overnight leak down test — Recheck air pressure after the vehicle has been used for 24 hours. If the pressure has dropped more than 5 PSI, then there is a leak that must be fixed. Either fix the leak yourself or return to the installer for service.
- ❑ Air pressure requirements — Regardless of load, the air pressure should always be adjusted to maintain adequate ride height at all times while driving.
- ❑ Thirty day or 500 mile test — Recheck the air spring system after 30 days or 500 miles, whichever comes first. If any part shows signs of rubbing or abrasion, the source should be identified and moved, if possible. If it is not possible to relocate the cause of the abrasion, the air spring may need to be remounted. If professionally installed, the installer should be consulted. Check all fasteners for tightness.

Product Use, Maintenance and Servicing

Suggested Driving Air Pressure	Maximum Air Pressure
45-55 PSI	125 PSI
FAILURE TO MAINTAIN ADEQUATE MINIMUM PRESSURE (OR PRESSURE PROPORTIONAL TO LOAD) WILL RESULT IN BOTTOMING OUT, OVER-EXTENSION OR RUBBING AGAINST ANOTHER COMPONENT AND WILL **VOID THE WARRANTY**.	

MAINTENANCE GUIDELINES

NOTE *By following these steps, vehicle owners will obtain the longest life and best results from their air spring.*

1. Check the air pressure before driving.
2. Never inflate beyond 125 PSI.
3. If you develop an air leak in the system, use a soapy water solution to check all air line connections, before deflating and removing the spring.
4. When increasing load, always adjust the air pressure to maintain normal ride height. Increase or decrease pressure from the system as necessary to attain normal ride height for optimal ride and handling. Remember that loads carried behind the axle (including tongue loads) require more leveling force (pressure) than those carried directly over the axle.

⚠ CAUTION FOR YOUR SAFETY AND TO PREVENT DAMAGE TO YOUR VEHICLE, DO NOT EXCEED MAXIMUM GROSS VEHICLE WEIGHT RATING (GVWR), AS INDICATED BY THE VEHICLE MANUFACTURER. ALTHOUGH YOUR AIR SPRINGS ARE RATED AT A MAXIMUM INFLATION PRESSURE OF 125 PSI, THE AIR PRESSURE ACTUALLY NEEDED IS DEPENDENT ON YOUR LOAD.

5. Always add air to the springs in small quantities, checking the pressure frequently. Sleeves require less air volume than a tire and inflate quickly.
6. Should it become necessary to raise the vehicle by the frame, make sure the control system is turned off before lifting.

Troubleshooting Guide

1. Leak test the air line connections, the threaded connection into the air spring, and all fittings in the control system.
2. Inspect the air lines to be sure none are pinched. Tie straps may be too tight. Loosen or replace the strap and replace leaking components.
3. Inspect the air line for holes and cracks. Replace as needed.
4. Look for a kink or fold in the air line. Reroute as needed.

If the preceding steps do not solve the problem, it is possibly caused by a failed air spring — either a factory defect or an operating problem. Please call Air Lift at (800) 248-0892 for assistance.

Frequently Asked Questions

Q. Will installing air springs increase the weight ratings of a vehicle?
No. Adding air springs will not change the weight ratings (GAWR, GCWR and/or GVWR) of a vehicle. Exceeding the GVWR is dangerous and voids the Air Lift warranty.

Q. How long should air springs last?
If the air springs are properly installed and maintained they can last indefinitely.

Q. Will raising the vehicle on a hoist for service work damage the air springs?
No. The vehicle can be lifted on a hoist for short-term service work such as tire rotation or oil changes. However, if the vehicle will be on the hoist for a prolonged period of time, support the axle with jack stands in order to take the tension off of the air springs.

Tuning the Air Pressure

Pressure determination comes down to three things — level vehicle, ride comfort, and stability.

1. **Level vehicle**

   If the vehicle's headlights are shining into the trees or the vehicle is leaning to one side, then it is not level. Raise the air pressure to correct either of these problems and level the vehicle.

2. **Ride comfort**

   If the vehicle has a rough or harsh ride it may be due to either too much pressure or not enough. Try different pressures to determine the best ride comfort. See Air Lift suggested driving air pressure.

3. **Stability**

   Stability translates into safety and should be the priority, meaning the driver may need to sacrifice a perfectly level and comfortable ride. Stability issues include roll control, bounce, dive during braking and sponginess. Tuning out these problems usually requires additional air pressure, strut damping, or both.

Checking for leaks

1. Inflate the air spring to 80 PSI.
2. Spray all connections and the inflation valves with a solution of 1/5 liquid dish soap and 4/5 water. Spot leaks easily by looking for bubbles in the soapy water.
3. After the test, deflate the springs to the minimum pressure required to restore the system to normal ride height.
4. Check the air pressure again after 24 hours. A 2-4 PSI loss after initial installation is normal. Retest for leaks if the loss is more than 5 PSI.

Fixing Leaks

1. If there is a problem with a swivel fitting:
   a. Check the air line connection by deflating the spring and removing the line by pulling the collar against the fitting and pulling firmly on the air line. Trim 1" off the end of the air line. Be sure the cut is clean and square (see fig. 24). Reinsert the air line into the push-to-connect fitting.
   b. Check the threaded connection by tightening the swivel fitting another ½ turn. If it still leaks, deflate the air spring, remove the fitting, and re-coat the threads with thread sealant. Reinstall by hand tightening as much as possible and then use a wrench for an additional two turns.
2. If the preceding steps have not resolved the problem, call Air Lift customer service at (800) 248-0892.

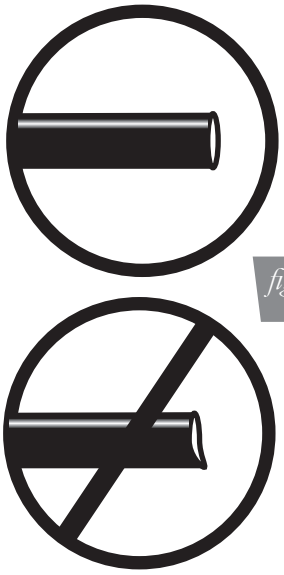

fig. 24

Warranty and Returns Policy

Air Lift Performance warrants its performance products for one year to the original purchaser against manufacturing defects one year from the date of purchase when used on cars and trucks as specified under normal operating conditions. The warranty does not apply to products that have been improperly applied, improperly installed, or which have not been maintained in accordance with installation instructions furnished with all products. The consumer will be responsible for removing (labor charges) the defective product from the vehicle and returning it, transportation costs prepaid, to the dealer from which it was purchased or to Air Lift Performance for verification.

Air Lift will repair or replace, at its option, defective products or components. A minimum $10.00 shipping and handling charge will apply to all warranty claims. Before returning any defective product, you must call Air Lift at (800) 248-0892 in the U.S. and Canada (elsewhere, (517) 322-2144) for a Returned Materials Authorization (RMA) number. Returns to Air Lift can be sent to: Air Lift Performance • 2727 Snow Road • Lansing, MI • 48917.

Product failures resulting from abnormal use or misuse are excluded from this warranty. The loss of use of the product, loss of time, inconvenience, commercial loss or consequential damages is not covered. The consumer is responsible for installation/reinstallation (labor charges) of the product. Air Lift Performance reserves the right to change the design of any product without assuming any obligation to modify any product previously manufactured.

This warranty gives you specific legal rights and you may also have other rights that may vary from state-to-state. Some states do not allow limitations on how long an implied warranty lasts or allow the exclusion or limitation of incidental or consequential damages. The above limitation or exclusion may not apply to you. There are no warranties, expressed or implied including any implied warranties of merchantability and fitness, which extend beyond this warranty period. There are no warranties that extend beyond the description on the face hereof. Seller disclaims the implied warranty of merchantability. (Dated proof of purchase required.)

Replacement Information

If you need replacement parts, contact the local dealer or call Air Lift customer service at (800) 248-0892. Most parts are immediately available and can be shipped the same day.

Contact Air Lift Performance customer service at (800) 248-0892 first if:

- Parts are missing from the kit.
- Need technical assistance on installation or operation.
- Broken or defective parts in the kit.
- Wrong parts in the kit.
- Have a warranty claim or question.

Contact the retailer where the kit was purchased:

- If it is necessary to return or exchange the kit for any reason.
- If there is a problem with shipping if shipped from the retailer.
- If there is a problem with the price.

Contact Information

If you have any questions, comments or need technical assistance contact our customer service department by calling (800) 248-0892. For calls from outside the USA or Canada, our local number is (517) 322-2144. You may also contact customer service anytime by e-mail at techsupport@airliftperformance.com.

For inquiries by mail, our address is PO Box 80167, Lansing, MI 48908-0167. Our shipping address for returns is 2727 Snow Road, Lansing, MI 48917.

You may also contact our sales team anytime by e-mail at sales@airliftperformance.com or on the web at www.airliftperformance.com.

Need Help?

Contact our customer service department by calling (800) 248-0892. For calls from outside the USA or Canada, our local number is (517) 322-2144.

Thank you for purchasing Air Lift Performance products!

Air Lift Performance • 2727 Snow Road • Lansing, MI 48917 or PO Box 80167 • Lansing, MI 48908-0167
Toll Free (800) 248-0892 • Local (517) 322-2144 • Fax (517) 322-0240 • www.airliftperformance.com

Printed in
the USA

Kits 78622/78623

Volkswagen MKVII

Rear Application - Independent Suspension (with and without shocks)

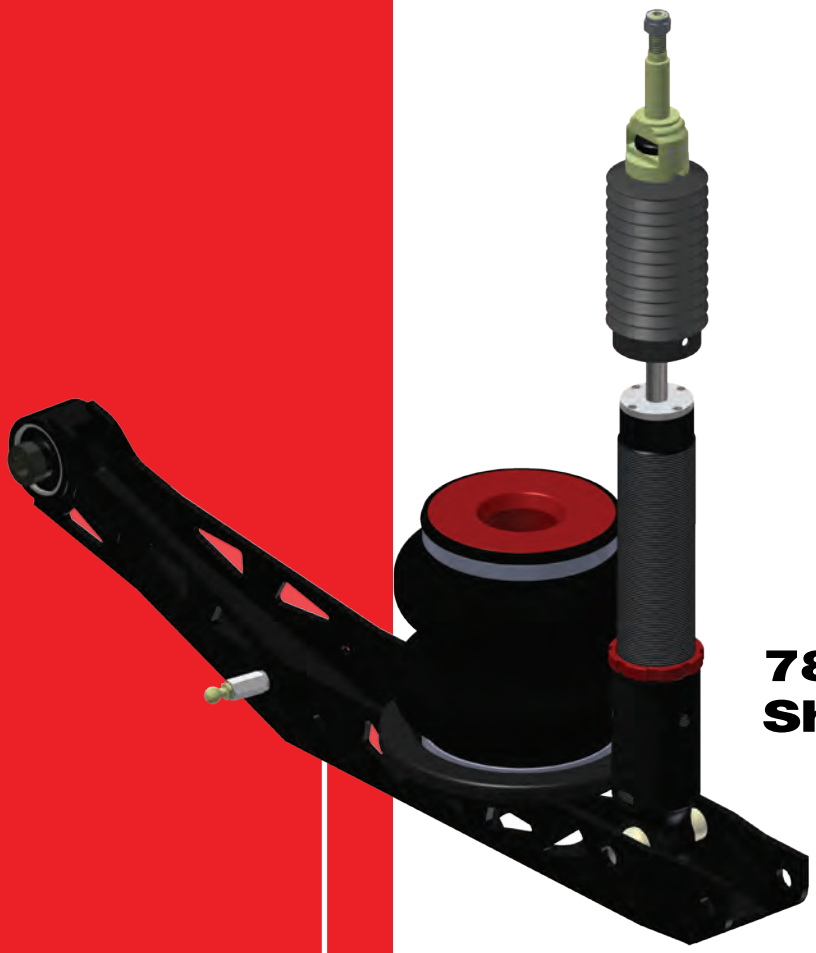

78622 Shown

INSTALLATION GUIDE

For maximum effectiveness and safety, please read these instructions completely before proceeding with installation.

Failure to read these instructions can result in an incorrect installation.

MN-943 • (021505) • ECR 8277

TABLE OF CONTENTS

Introduction 2
Notation Explanation 2

Important Safety Notices 2

Installation Diagram 3
Hardware List 3

Installing the Air Suspension 4
Preparing the Vehicle. 4
Removal of Stock Suspension 4
Installing the Kit Components 7
Routing Air Lines 10

Before Operating 11
Setting the Ride Height 11
Torque Specifications 11
Suggested Driving Air Pressure and Maximum Air Pressure 11
Check for Binding 12
Damping Adjustment. 12
Aligning the Vehicle 12
Adjusting Extended or Drop Height Using Lower Mount 13
Installation Checklist 15
Post-installation Checklist. 15

Use, Maintenance and Servicing 16
Tuning the Air Pressure 16

Troubleshooting Guide 17
Tips for Installing Air Lines 18
Checking for Leaks 18
Fixing Leaks 18

Limited Warranty and Return Policy 20

Replacement Part Information. 21

Contact Information 21

Introduction

Air Lift Performance thanks you for purchasing the most complete, fully engineered high-performance air suspension made for the Volkswagen MKVII. Read these installation instructions to correctly and safely set up the vehicle for a #lifeonair.

Air Lift assumes that the installer has the mechanical knowledge and ability to work on vehicle suspension systems and has basic tools necessary to complete the project. Special tools needed to complete the installation are noted on the Installation Diagram page.

Air Lift reserves the right to make changes and improvements to its products and publications at any time. For the latest version of this manual, contact Air Lift Performance at **(800) 248-0892** or visit **www.airliftperformance.com**.

An Air Lift Performance air management system is highly recommended for this product. Learn more at **air-lift.co/productlines**.

NOTATION EXPLANATION

Hazard notations appear in various locations in this publication. Information which is highlighted by one of these notations must be observed to help minimize risk of personal injury or possible improper installation which may render the vehicle unsafe. Notes are used to help emphasize areas of procedural importance and provide helpful suggestions. The following definitions explain the use of these notations as they appear throughout this guide.

DANGER — INDICATES IMMEDIATE HAZARDS WHICH WILL RESULT IN SEVERE PERSONAL INJURY OR DEATH.

WARNING — INDICATES HAZARDS OR UNSAFE PRACTICES WHICH COULD RESULT IN SEVERE PERSONAL INJURY OR DEATH.

CAUTION — INDICATES HAZARDS OR UNSAFE PRACTICES WHICH COULD RESULT IN DAMAGE TO THE MACHINE OR MINOR PERSONAL INJURY.

NOTE — *Indicates a procedure, practice or hint which is important to highlight.*

Important Safety Notices

WARNING — DO NOT INFLATE AIR SPRINGS WHILE OFF OF THE VEHICLE. DAMAGE TO ASSEMBLY MAY RESULT AND VOID WARRANTY.

CAUTION — DO NOT WELD TO OR MODIFY PERFORMANCE STRUTS/SHOCKS IN ANY WAY. DAMAGE TO UNIT MAY OCCUR AND WILL VOID WARRANTY.

Installation Diagram

NOTE:
Kit 78623 uses factory shocks.

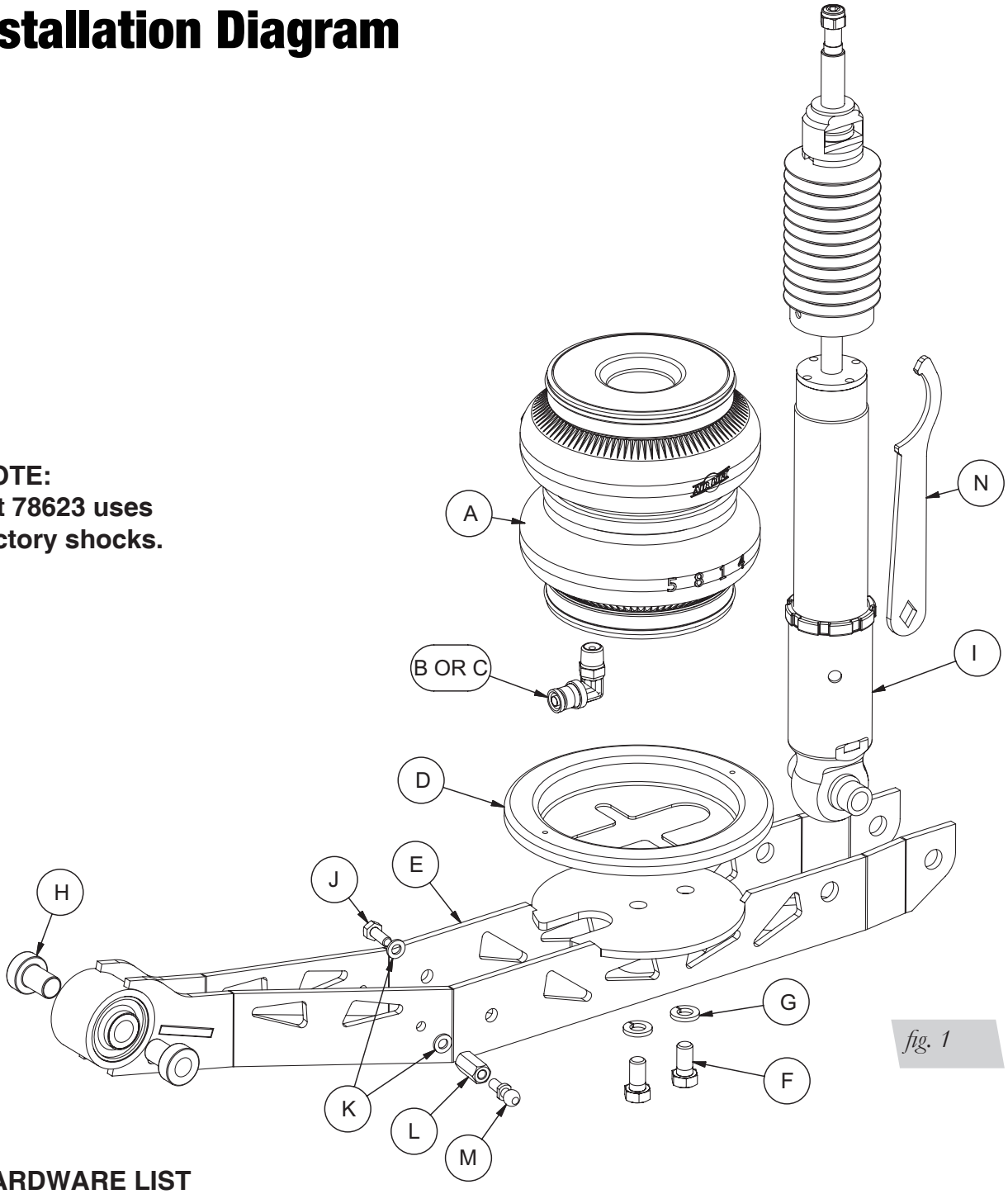

fig. 1

HARDWARE LIST

Item	Part #	Description	Qty	Item	Part #	Description	Qty
A	58531	Air Spring, 2B6 Reg, Recess Mount	2	H	13989	Spacer, 14mm Bushing	4
B	21779	1/4” MNPT X 1/4” PTC Elbow, DOT	2	I	26779	Shock, MKVII Rear	2
C	21851	1/4” FNPT X 3/8” PTC, 90 Deg., DOT	2	J	17389	M6-1 X 16 Hex Bolt	2
D	11801	Roll Plate	2	K	18579	M6 Flat Washer	4
E	11135	Control Arm, VW MKVII, Rear	2	L	18612	M6 X 1-22 Hex Coupler	2
F	17101	3/8”-16 X 3/4” Hex Bolt	4	M	17492	M6 X 1 Ball Stud	2
G	18427	3/8” Lock Washer	4	N		Spanner Wrench	1

STOP! Missing or damaged parts? Call Air Lift customer service at (800) 248-0892 for a replacement part.

Installing the Air Suspension

NOTE *See important safety notices on page 2.*

PREPARING THE VEHICLE

1. Elevate and support the vehicle with a hoist or jack stands.
2. Remove the rear wheel and support the lower control arm (Figs. 2 & 3).

fig. 2

fig. 3

REMOVAL OF STOCK SUSPENSION

1. Vehicles without headlight alignment systems, move to next step. Unclip the plastic headlight alignment armature from the bracket attached to the control arm (Fig. 4).
2. Unbolt the stabilizer end link from the lower control arm. Disconnect the end link from the opposite side control arm at this time. (Figs. 5 & 6).

fig. 4

fig. 5

fig. 6

3. Remove the nut from the lower shock eye mount (Fig. 7).

fig. 7

4. Remove the outer hub to control arm nut (Fig. 8).

fig. 8

⚠ CAUTION

COIL SPRING UNDER PRESSURE. PROCEED WITH CAUTION.

5. With the lower control arm supported, remove the shock and hub bolts (Fig. 9a) and carefully lower the arm until the coil spring is free to remove (Figs. 9b & 9c).

fig. 9a

fig. 9b

fig. 9c

6. Support the muffler, remove the muffler support brackets (Fig. 10), and lower the muffler enough to gain access to the inner control arm cam bolt. Remove this bolt and control arm from the vehicle (Figs. 11 & 12).

fig. 10

fig. 11

fig. 12

7. If installing kit 78623 without rear shocks, move on to Step 3 of Installing the Kit Components. Remove the fender liner and unbolt the shock upper mount (Fig. 13a). Remove the assembly from the vehicle (Fig. 13b).

fig. 13a

fig. 13b

INSTALLING THE KIT COMPONENTS

1. Disassemble the stock rear shock from the upper mount. Remove the lower dust cover and jounce bumper from the mount (Fig. 14). Install the Air Lift Performance shock with the adjuster lettering facing outboard (Figs. 15-17). Torque rod nut to 27Nm (20 lb.-ft.).

fig. 14

fig. 15

fig. 16

fig. 17

2. Apply the plastic cap on top of the mount and reattach it to the vehicle chassis. Torque upper chassis bolts to 50Nm + 90 degrees (37 lb.-ft. + 90 Degrees).
3. Attach the supplied control arm to the hub. Do not torque bolt at this time (Fig. 18).

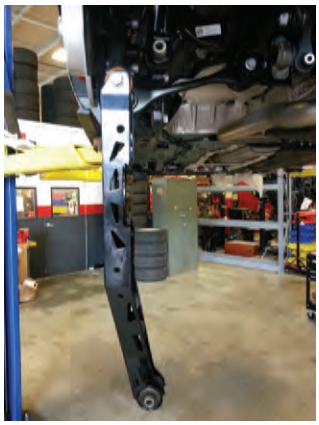

fig. 18

4. Lift the control arm, align the shock eye and attach with the previously removed bolt. Do not torque at this time (Figs. 19 & 20).

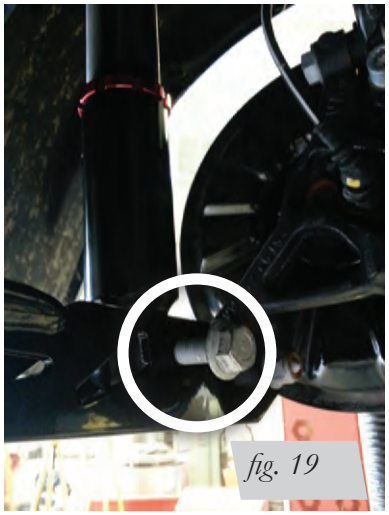
fig. 19

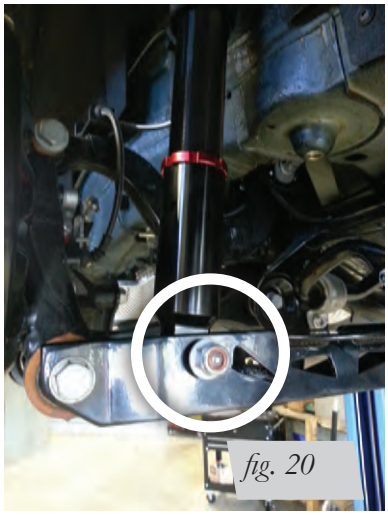
fig. 20

5. Remove the zip tie from the control arm inner bushing/spacers, align with the inner pivot hole, and insert the previously removed cam bolt through the arm (Fig. 21). Apply the cam washer and nut, and fit snugly into place (Fig. 22). Do not torque at this time.

fig. 21

fig. 22

6. Align the stabilizer end link and bolt through the control arm (Fig. 23).

fig. 23

7. Reattach the muffler hanger bracket (Fig. 24). Torque bolts to 25Nm (18 lb.-ft.)

fig. 24

8. Apply thread sealant to the threads of the appropriate fitting. Tighten the appropriate fitting to the airspring one and three-quarter turns beyond hand-tight (Fig. 25).

fig. 25

9. Apply the roll plate to the bottom of the air spring (Fig. 26), collapse the air spring, and seat around the upper spring seat and against the lower control arm (Fig. 27). Align the mounting holes of the arm and airspring (Fig. 28) and install two bolts with lock washers through the arm, into the airspring (Fig. 29). Torque to 27Nm (20 lb.-ft.).

fig. 26

fig. 27

fig. 28

fig. 29

10. Vehicles without headlight alignment systems: move to next step. Locate the hole through the control arm closest to the stabilizer end link and on the same side as the headlight alignment bracket (Fig. 31). Insert the M6 bolt through this hole with a flat washer on each side of the arm (Fig. 32). Thread the hex coupler onto this bolt. Tighten a quarter-turn beyond hand-tight. Thread the supplied ball stud into the hex coupler a quarter-turn beyond hand-tight. Now clip the plastic armature of the headlight alignment system onto the ball stud (Fig. 33).

fig. 31

fig. 32

fig. 33

ROUTING THE AIR LINES

1. Fully compress the suspension using a jack. With the suspension compressed, review the best routing for the air line that is clear of all suspension components and axle.
2. Routing should also allow for the suspension to extend without kinking or pulling the line tight or rubbing on other components. Following the brake line routing is often a good place to start. Check clearances to all other components.

Before Operating

SETTING THE RIDE HEIGHT

1. With the suspension fully compressed, take a measurement from the fender to a chosen reference point – typically the center of the axle. Record this measurement as max compression (MC).
2. Cycle the suspension to max extension (ME) and record the measurement from the fender to the same reference point.
3. Add ME and MC, then divide the total by 2. Set the suspension to this point. This position will give 50% stroke in either direction and is a starting point for ride height (Fig. 34).

Formula for Calculating Ride Height
(ME+MC)÷2=MID STROKE

fig. 34

4. With the suspension at this position, loosen, then re-torque all suspension bushing pivot joint fasteners to the manufacturer's specifications (Table 1):

Torque Specifications		
Location	Nm	lb-ft
Lower control arm cam bolt	95	70
Lower control arm to end link bolt	45	33
Lower control arm to shock eye bolt	95	70
Lower control arm to hub	90+90 degrees	66+90 degrees
Lower control arm to headlight alignment stud	1/4 turn beyond hand-tight	
Shock mount to chassis	50+90 degrees	37+90 degrees
Shock rod nut	27	20
Upper transverse link to subframe	95	70
Upper transverse link to hub	130+90 degrees	96+90 degrees
Tie rod to subframe	90+90 degrees	66+90 degrees
Tie rod to hub	130+90 degrees	96+90 degrees
Wheel studs	120	89
Braided air line threads	1 and 3/4 turns beyond hand-tight	

Table 1

Suggested Driving Air Pressure	Maximum Air Pressure
45-65 PSI	**125 PSI**
FAILURE TO MAINTAIN ADEQUATE MINIMUM PRESSURE (OR PRESSURE PROPORTIONAL TO LOAD) MAY RESULT IN EXCESSIVE BOTTOMING OUT AND **WILL VOID THE WARRANTY**.	

Table 2

CHECK FOR BINDING

1. Inflate and deflate the system (do not exceed 125 PSI) to check for clearance or binding issues. With the air springs deflated, check clearances on everything so as not to pinch brake lines, vent tubes, etc. Clear lines if necessary.
2. Inflate the air springs to 75-90 PSI and check all connections for leaks.

⚠ CAUTION

MAKE SURE THE FRONT WHEELS ARE STRAIGHT WHEN DEFLATING AND REINFLATING AIR BAGS.

DAMPING ADJUSTMENT

Suspension damping is a matter of compromise. Setting it too stiff will make the ride feel jarring. In addition, if the suspension is too stiff, the tires will lose contact with the road, reducing control and power delivery. On the other hand, if the suspension is too soft, the car can experience brake dive and excessive bouncing. The sweet spot lies somewhere in the middle. Air Lift dampers have a range of adjustment, which allows the driver to tune the ride and handling to his or her preferences.

Air Lift recommends damper and air pressure settings for every vehicle kit, but it is impossible to consider every situation. For example, even though Air Lift kits replace the dampers and springs, vehicles with sport-tuned suspensions might have stiffer bushings, larger anti-roll bars, bigger wheels, wider tires, etc. These settings may need to be adjusted to different vehicles and driving characteristics.

1. The dampers in this kit have 30 settings, or “clicks,” of adjustable compression and rebound damping characteristics. Damping is changed through the damper rod using the supplied adjuster (Fig. 35).
2. Turn the adjuster clockwise (H) and the damping settings are hardened, reducing oscillations and body motion. Turn the adjuster counterclockwise (S) and the damping is softened.
3. Each damper in this kit is preset to “-15 clicks.” This means that the damper is adjusted 15 clicks away from full stiff, which starts at 0. Counting up from full stiff is the preferred method of keeping track of, or setting, damping. This setting was developed on a 2015 Volkswagen Golf GTI.

fig. 35

ALIGNING THE VEHICLE

1. Set the vehicle to the height at which it will most often be driven.
2. If the ride height is lower than stock, Air Lift Performance recommends loosening all pivot points (bolts, nuts) on any control arm, strut arm or radius rod that contains bushings. Once they have been loosened, re-torque to stock specifications (Table 1).

NOTE

It may be necessary to cycle the suspension to loosen the bushing from its mount. This will help re-orient the bushing at its new position based on the chosen ride height.

3. Get a shop alignment of the vehicle at the new chosen ride height.

ADJUSTING EXTENDED OR DROP HEIGHT USING LOWER MOUNT

These dampers have been pre-set at the factory to provide maximum drop height while maintaining adequate tire clearance to the air spring. If you wish to gain more extended height (lift), which is the same as reducing drop height, or want to lower the chassis further and there is still adjustment available at the lower mount, please use the following procedure:

1. Support the vehicle with jack stands or a hoist at approved lifting points.
2. Remove the wheel.
3. Using the supplied spanner wrench, loosen the locking collar (Fig. 36).

The dampers in this kit may look different, but they all allow adjustment of the locking collar with the included spanner wrench.

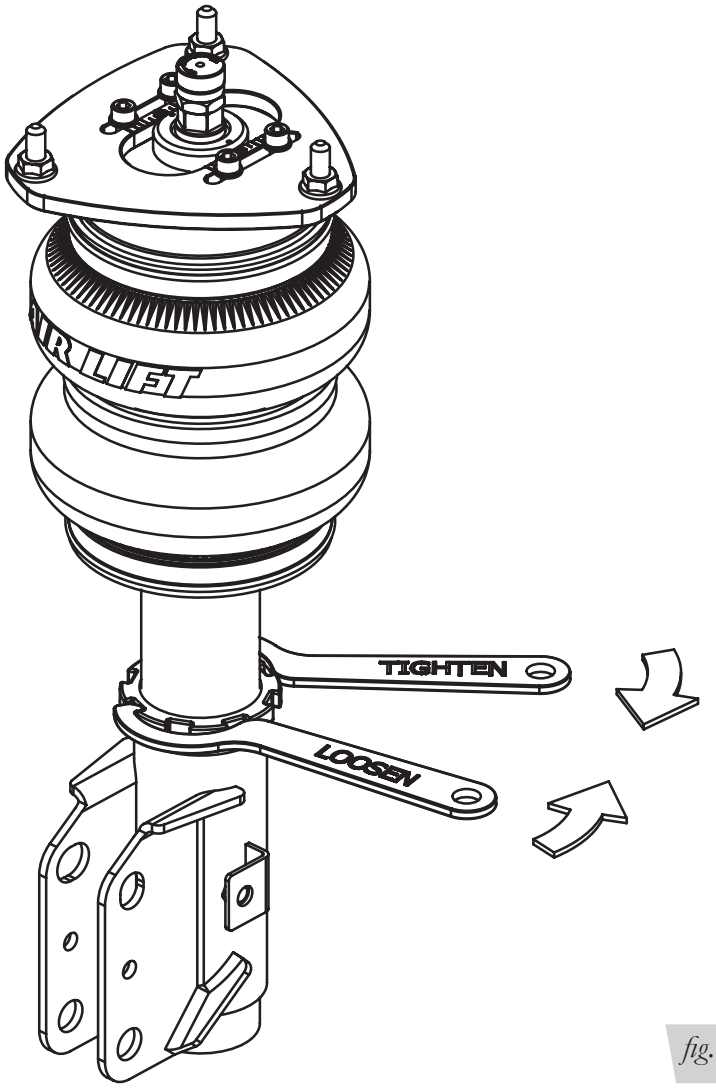

fig. 36

4. Deflate the air spring to 0 PSI on the corner you are adjusting.
5. Disconnect lower mount from suspension.
6. Spin the lower mount to the desired location.

NOTE *Not all vehicles will have further drop height available.*

7. Re-install lower mount to suspension and torque fasteners.
8. Tighten the lower locking collar to the lower mount using significant force.

⚠ CAUTION

WHEN ADJUSTING HEIGHT UPWARD, MAKE SURE THAT THE DAMPER BODY ENGAGES ALL THE THREADS OF THE LOWER MOUNT (FIG. 37). WHEN ADJUSTING DOWNWARD, MAKE SURE THERE IS ADEQUATE AIR SPRING CLEARANCE TO THE TIRE/WHEEL ASSEMBLY. CLEARANCE MUST BE CHECKED WITH SYSTEM FULLY DEFLATED AS WELL AS FULLY INFLATED TO ENSURE THAT NO RUBBING OCCURS. FAILURE TO MAINTAIN ADEQUATE CLEARANCE CAN RESULT IN AIR SPRING FAILURE AND WILL NOT BE COVERED UNDER WARRANTY.

⚠ CAUTION

DO NOT ADJUST HEIGHT BY SPINNING AIR SPRING ON DAMPER! DOING SO MAY CAUSE AN AIR LEAK AND COMPROMISE THE ASSEMBLY.

FOR STRUTS:

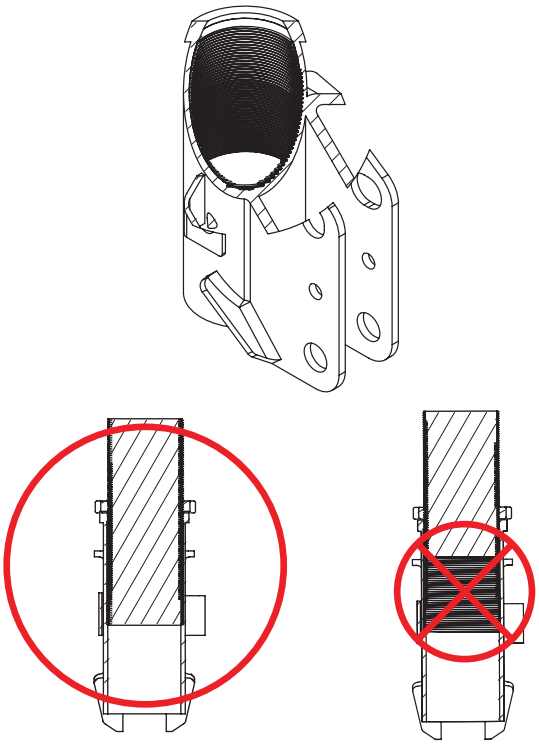

OK, no threads showing.

Not OK, threads are showing.

FOR SHOCKS:

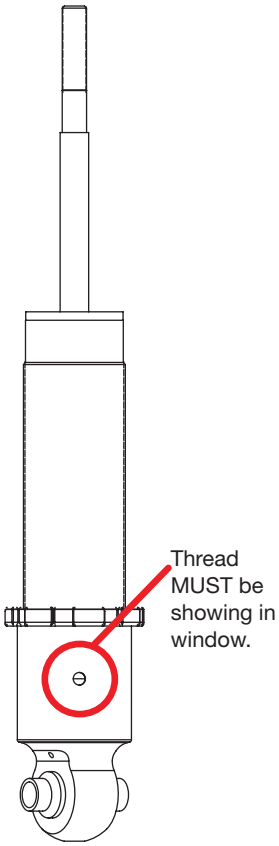

fig. 37

INSTALLATION CHECKLIST

- ☐ **Clearance** — Inflate the air springs to 75-90 PSI and make sure there is at least 1/2" clearance from anything that might rub against the air spring. This should be checked with the air spring fully inflated and fully deflated.

- ☐ **Leak** — Inflate the air springs to 75-90 PSI and check all connections for leaks. All leaks must be eliminated before the vehicle is road tested.

- ☐ **Heat** — Be sure there is sufficient clearance from heat sources, at least 6" for air springs and air lines. If a heat shield was included in the kit, install it. If there is no heat shield, but one is required, call Air Lift customer service at **(800) 248-0892**.

- ☐ **Fastener** — Recheck all bolts for proper torque.

- ☐ **Road** — Inflate the springs to recommended driving pressures. Drive the vehicle 10 miles and recheck for clearance, loose fasteners and air leaks.

- ☐ **Operating instructions** — If professionally installed, the installer should review the operating instructions with the owner. Be sure to provide the owner with all paperwork that came with the kit.

POST-INSTALLATION CHECKLIST

- ☐ **Overnight leak down test** — Recheck air pressure 24 hours after installation and driving of the vehicle. If the pressure has dropped more than 5 PSI, there is a leak that must be fixed.

- ☐ **Air pressure requirements** — It is important to understand the air pressure requirements of the air spring system. Regardless of load, the air pressure should always be adjusted to maintain adequate ride height at all times while driving.

- ☐ **Thirty-day or 500-mile test** —Recheck the air spring system after 30 days or 500 miles, whichever comes first. If any part shows signs of rubbing or abrasion, the source should be identified and moved, if possible. If it is not possible to relocate the cause of the abrasion, the air spring may need to be remounted. If professionally installed, the installer should be consulted. Check all fasteners for tightness.

Use, Maintenance and Servicing

1. An Air Lift air management system is strongly recommended for this product, but it is possible to operate without one. The air lines can be routed to Schrader valves for use with a separate air compressor. Air lines and Schrader valves are not included with Air Lift Performance kits and would need to be purchased separately. To learn more about Air Lift management systems visit **air-lift.co/productlines**.
2. Check the air pressure before driving.

⚠ WARNING

BEFORE SERVICING THE VEHICLE, MAKE SURE TO TURN OFF “RISE ON START” AND “PRESET MAINTAIN.” THIS WILL ELIMINATE ANY UNINTENDED SUSPENSION CYCLING IF YOU NEED TO TURN THE KEY ON IN THE VEHICLE FOR ANY REASON.

TUNING THE AIR PRESSURE.

Pressure determination comes down to three things — level vehicle, ride comfort and stability.

1. **Level vehicle**

   Depending on load, it is possible one side will need more pressure than the other to level the vehicle.

2. **Ride comfort**

   If the vehicle has a harsh ride, it may be due to either too much pressure or not enough causing frequent bottoming. Also, riding the vehicle at the top, or close to the top of the available stroke will cause an uncomfortable ride due to a lack of rebound travel. This situation should be avoided for driving any significant distance. Try different pressures to determine the best ride comfort. See the Air Lift suggested driving air pressure for this vehicle (Table 2).

3. **Stability**

   Stability translates into safety and should be the priority, meaning the driver may need to sacrifice a perfectly level and comfortable ride. Stability issues include roll control, bounce, dive during braking and sponginess. Tuning out these problems usually requires additional air pressure, damping or both.

Troubleshooting Guide

PROBLEM	CAUSE	SOLUTION
Air spring won't maintain pressure.	Leak at fitting, air line not cut properly or damage to air line during installation.	Find location of leak by spraying listed components with soapy water solution and look for bubbles. Tighten air fitting, re-cut air line or replace damaged components.
	Leak at lower O-ring on damper if air spring is over the damper.	Spray bottom of air spring with soapy water solution and look for bubbles. Contact Air Lift customer service at **(800) 248-0892** to determine if component should be replaced.
Knocking noise when hitting bumps.	Loose suspension component such as locking collar on damper.	Tighten lower locking collar with significant force, check and tighten suspension components to factory specs at desired ride height.
	Driving vehicle too close to maximum extension.	Check current ride height and compare to maximum height. If there is less than 1" (25mm) difference, reduce air pressure to lower ride height.
		Lengthen strut or shock to increase available up travel.
Suspension bottoms out.	Air pressure is too low, causing air springs to bottom out.	Raise air pressure.
The ride is too bouncy.	Air pressure is too high, causing air springs to be too stiff.	Lower air pressure and adjust damper length if necessary to achieve proper ride height.
	Damping is inadequate.	Increase damping with adjusters.
The ride is too soft or floaty.	Damping is inadequate.	
The ride is too harsh.	Excessive damping.	Reduce damping with adjusters.

TIPS FOR INSTALLING AIR LINES

When cutting air lines, use a sharp knife or a hose cutter and make clean, square cuts (Fig. 38). Do not use scissors or wire cutters because these tools will deform the air line, causing it to leak around fittings. Do not cut the lines at an angle.

Do not bend the 1/4" hose at a radius of less than 1" and do not put side load pressure on fitting. The hose should be straight beyond the fitting for 1" before bending.

Inspect hose for scratches that run lengthwise on hose prior to installation. Contact Air Lift customer service at **(800) 248-0892** if the air line is damaged.

To watch a video demonstrating proper air line cutting, go to air-lift.co/cuttingairline

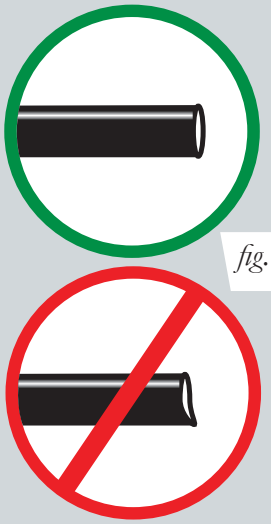

fig. 38

CHECKING FOR LEAKS

1. Inflate the air spring to at least 80 PSI.
2. Spray all connections with a solution of 1/5 liquid dish soap and 4/5 water. Spot leaks easily by looking for bubbles in the soapy water.
3. Check the air pressure again after 24 hours. A 2-4 PSI loss after initial installation is normal. Retest for leaks if the loss is more than 5 PSI.

FIXING LEAKS

1. **Air line to PTC fitting**: Try pushing the air line firmly into the fitting to ensure it is properly seated. If leak persists, deflate the spring and remove the air line by pushing the collar toward the fitting body and pulling firmly on the air line. Trim 1" off the end of the air line making sure the cut is clean and square. Reinsert air line firmly into fitting and pull back on the air line to make sure it is seated.
2. **Threaded connection**: If possible, tighten the fitting another half turn. If the leak persists, deflate spring, remove fitting and re-coat threads with thread sealant. Reinstall to hand tight and then use wrench to finish tightening an additional 1 3/4 turns.
3. **Air spring O-ring seal**: If a leak is found at the upper or lower air spring seal on a strut or shock, contact Air Lift customer service at **(800) 248-0892.**

Notes

Limited Warranty and Return Policy

WHAT THIS WARRANTY COVERS

Air Lift Company warrants to the original purchaser for a period of one year from the date of original purchase that the Air Lift Performance damper kits will be free from defects in workmanship and materials for the normal expected life of the part when used on cars and trucks as specified by Air Lift Company and under normal operating conditions, subject to the requirements and exclusions set forth below.

WHAT THIS WARRANTY DOES NOT COVER

The warranty does not apply to products that have been improperly applied, improperly installed, or which have not been maintained in accordance with installation instructions furnished with all products. This warranty does not apply and is void if damage or failure is caused by: accident, abuse, misuse (including but not limited to racing or off-road activities or commercial use), abnormal use, faulty installation, liquid contact, fire, earthquake or other external cause; operating the product outside Air Lift Company's instructions, specifications or guidelines; or service, alteration, maintenance or repairs performed by anyone other than Air Lift Company to the product from its purchased condition. This warranty also does not apply to: Universal Air (Fabricator Kits), consumable parts, such as batteries; cosmetic damage, including but not limited to scratches or dents; defects caused by normal wear and tear or otherwise due to the normal aging of the product, or if any serial or identification number has been removed or defaced from the product. Air Lift Company reserves the right to change the design of any product without assuming any obligation to modify any product previously manufactured.

LIMITATION OF LIABILITY

To the extent permitted by law, this warranty and the remedies set forth herein are exclusive and in lieu of all other warranties, remedies and conditions, whether oral, written, statutory, express or implied. AIR LIFT COMPANY DISCLAIMS ALL STATUTORY AND IMPLIED WARRANTIES, INCLUDING WITHOUT LIMITATION, WARRANTIES OF MERCHANTABILITY AND FITNESS FOR A PARTICULAR PURPOSE AND WARRANTIES AGAINST HIDDEN OR LATENT DEFECTS TO THE EXTENT PERMITTED BY LAW. To the extent such warranties cannot be disclaimed, such implied warranties shall apply only for the warranty period specified above. Please note that some states do not allow limitation on how long an implied warranty (or condition) lasts. So the above limitation may not apply to you.

Except as provided in this warranty and to the extent permitted by law, Air Lift Company shall not be liable for any direct, special, incidental or consequential damages resulting from any breach of warranty or condition, or arising in connection with the sale, use or repair of air lift products, or under any other legal theory, including but not limited to loss of use, loss of revenue, loss of actual or anticipated profits, loss of the use of money, loss of business, loss of opportunity, loss of goodwill, and loss of reputation. Air Lift Company's maximum liability shall not in any case exceed the purchase price paid by you for the Air Lift product. Please note that some states do not allow the exclusion or limitation of incidental or consequential damages, so the above limitation or exclusion may not apply to you.

HOW TO GET SERVICE

If a defect in workmanship or materials causes your Air Lift Performance product to become inoperable within the warranty period, before returning any defective product, call Air Lift Company at (800) 248-0892 in the U.S. and Canada (elsewhere, (517) 322-2144) to obtain a Returned Materials Authorization (RMA) number. The consumer shall be responsible for removing (labor charges) the defective product from the vehicle and returning it, shipping costs prepaid, to Air Lift Company for verification. Returns to Air Lift Company must be postage prepaid and sent to: Air Lift Company • 2727 Snow Road • Lansing, MI • 48917. You must prove to the satisfaction of Air Lift Company the date of original purchase of your Air Lift Performance product. You must also enclose the RMA number and a return address. A minimum $10 shipping and handling charge will apply to all warranty claims. You must also pack the product to minimize the risk of it being damaged in transit. If we receive a product in damaged condition as the result of shipping, we will notify you and you must seek a claim with the shipper.

WHAT AIR LIFT COMPANY WILL DO

If you submit a valid claim to Air Lift Company during the warranty period, Air Lift Company will, at its option, repair your Air Lift Performance product or furnish you with a new or rebuilt product. Air Lift Company will not reimburse you for repairs or replacement parts provided by other parties. Your repaired or replacement Air Lift Performance product will be returned to you (subject to payment of the required warranty claim shipping and handling charge) and it will be covered under the warranty for the balance of the warranty period, if any. When a product or part is replaced, any replacement item becomes your property and the replaced item becomes property of Air Lift Company. You are responsible for installation/reinstallation (labor charges) of the product.

HOW THE LAW RELATES TO THIS WARRANTY

This warranty gives you specific legal rights and you may also have other rights which vary from state to state. By this warranty, Air Lift Company does not limit or exclude your rights except as allowed by law. To fully understand your rights, you should consult the laws of your state.

Replacement Part Information

If replacement parts are needed, contact the local dealer or call Air Lift customer service at **(800) 248-0892**. Most parts are immediately available and can be shipped the same day.

Contact Air Lift Company customer service at (800) 248-0892 first if:

- Parts are missing from the kit.
- Need technical assistance on installation or operation.
- Broken or defective parts in the kit.
- Wrong parts in the kit.
- Have a warranty claim or question.

Contact the retailer where the kit was purchased:

- If it is necessary to return or exchange the kit for any reason.
- If there is a problem with shipping if shipped from the retailer.
- If there is a problem with the price.

Contact Information

Mailing address	P.O. Box 80167 Lansing, MI 48908-0167
Shipping address for returns	2727 Snow Road Lansing, MI 48917
Phone	Toll free: (800) 248-0892 International: (517) 322-2144
Email	service@airliftcompany.com
Web address	www.airliftcompany.com

Need Help?

Contact Air Lift Company customer service department by calling (800) 248-0892. For calls from outside the USA or Canada, dial (517) 322-2144.

Connect by searching for **Air Lift Performance** *#LifeonAir*

Thank you for purchasing Air Lift Performance products!

Air Lift Performance • 2727 Snow Road • Lansing, MI 48917 or P.O. Box 80167 • Lansing, MI 48908-0167
Toll Free (800) 248-0892 • Local (517) 322-2144 • Fax (517) 322-0240 • www.airliftperformance.com

Printed in the USA
JJC_0816