Kits 78586/78585

Toyota Camry XV70 XSE/ SE/XLE/LE

Front Application

INSTALLATION GUIDE

For maximum effectiveness and safety, please read these instructions completely before proceeding with installation.

Failure to read these instructions can result in an incorrect installation.

MN-1114 • (021911) • ERN 9335

TABLE OF CONTENTS

A. Introduction 2
Notation Explanation 2

B. Important Safety Notices 2

C. Installation Diagram 3
Hardware List 3

D. Installing the Air Suspension 4
Removing the Stock Suspension 4
Installing Air Lift Performance Suspension 6
Routing the Air Lines 8

E. Before Operating 9
Setting the Ride Height 9
Torque Specifications 9
Suggested Driving Air Pressure 9
Maximum Air Pressure 9
Check for Binding 9
Installation Checklist 10
Damping Adjustment 10

Limited Warranty and Return Policy 12

A. Introduction

Air Lift Performance thanks you for purchasing the most complete, fully engineered high-performance air suspension made for the Toyota Camry XV70 (XSE/SE/XLE/LE). Read these installation instructions to correctly and safely set up the vehicle for a #lifeonair.

Air Lift assumes that the installer has the mechanical knowledge and ability to work on vehicle suspension systems and has basic tools necessary to complete a suspension replacement project. Special tools needed to complete the installation are noted on the *Installation Diagram* page.

Air Lift reserves the right to make changes and improvements to its products and publications at any time. For the latest version of this manual, contact Air Lift Performance at **(800) 248-0892** or visit **www.airliftperformance.com**.

An Air Lift Performance air management system is highly recommended for this product. Learn more at **air-lift.co/productlines**.

NOTATION EXPLANATION

Hazard notations appear in various locations in this publication. Information which is highlighted by one of these notations must be observed to help minimize risk of personal injury or possible improper installation which may render the vehicle unsafe. Notes are used to help emphasize areas of procedural importance and provide helpful suggestions. The following definitions explain the use of these notations as they appear throughout this guide.

DANGER — INDICATES IMMEDIATE HAZARDS WHICH WILL RESULT IN SEVERE PERSONAL INJURY OR DEATH.

WARNING — INDICATES HAZARDS OR UNSAFE PRACTICES WHICH COULD RESULT IN SEVERE PERSONAL INJURY OR DEATH.

CAUTION — INDICATES HAZARDS OR UNSAFE PRACTICES WHICH COULD RESULT IN DAMAGE TO THE VEHICLE OR MINOR PERSONAL INJURY.

NOTE — *Indicates a procedure, practice or hint which is important to highlight.*

B. Important Safety Notices

WARNING — DO NOT INFLATE AIR SPRINGS WHILE OFF OF THE VEHICLE. DAMAGE TO ASSEMBLY MAY RESULT AND VOID WARRANTY.

CAUTION — DO NOT WELD TO OR MODIFY PERFORMANCE STRUTS/SHOCKS IN ANY WAY. DAMAGE TO UNIT MAY OCCUR AND WILL VOID WARRANTY.

WARNING — AFTER INSTALLATION, ENSURE ALL ORIGINAL EQUIPMENT VEHICLE SAFETY FEATURES ARE PROPERLY CALIBRATED BY A QUALIFIED TECHNICIAN. CHANGING VEHICLE HEIGHT MAY AFFECT FUNCTIONING OF SAFETY SENSORS AND CAMERAS.

C. Installation Diagram

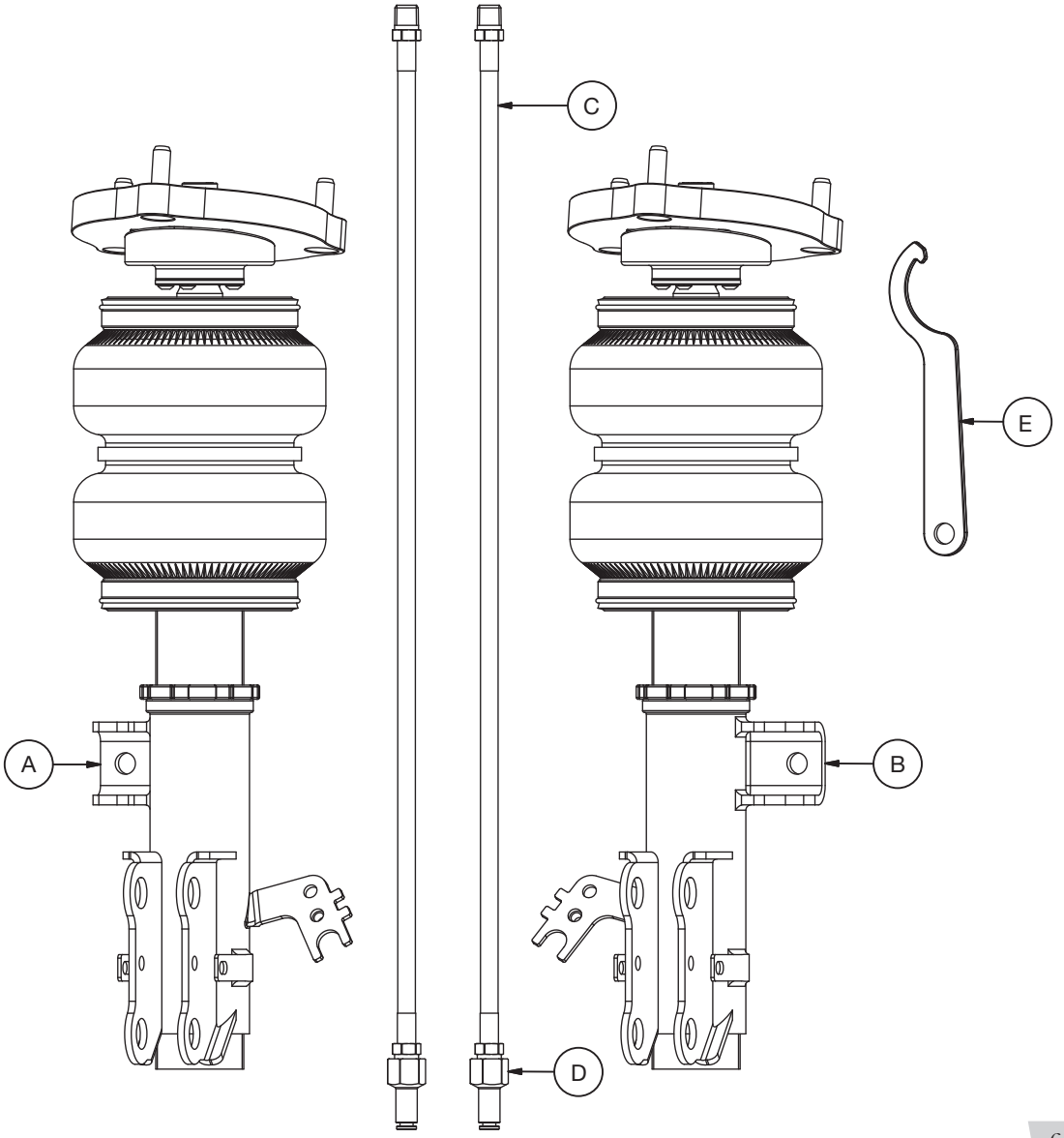

fig. C.1

HARDWARE LIST

Item	Part #	Description	Qty
A	35458	Strut, right front (SE)	1
A*	35456	Strut, right front (LE)	1
B	35459	Strut, left front (SE)	1
B*	35457	Strut, left front (LE)	1
C	20997	Leader line, 1/4"	2
D	21810	1/4" FNPT x 1/4" PTC Fitting	2
E	11289	M50 Spanner	1

* Not shown in the Installation Diagram (Fig. C.1)

STOP! Missing or damaged parts? Call Air Lift customer service at (800) 248-0892 for a replacement part.

D. Installing the Air Suspension

NOTE *See "Important Safety Notices" on page 2.*

⚠ CAUTION RAISE THE REAR OF THE VEHICLE WITH A JACK AT THE APPROVED LIFTING POINTS AND USE SAFETY STANDS TO SUPPORT THE VEHICLE.

REMOVING THE STOCK SUSPENSION

1. Raise vehicle and support suspension with safety stands (Fig. D.1). Remove the wheel (Fig. D.2).

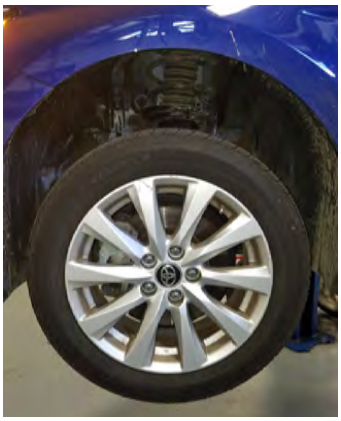

fig. D.1

fig. D.2

2. Unbolt brake hose/ABS sensor wire from strut (Figs. D.3 & D.4). Remove ABS sensor wire clip from opposite side of strut (Figs. D.5 & D.6). Retain bolts and clips for reinstallation.

fig. D.3

fig. D.4

fig. D.5

fig. D.6

3. Unbolt sway bar end link from strut tab (Figs. D.7 & D.8).

fig. D.7

fig. D.8

4. Remove lower strut mount bolts and separate lower strut mount from steering knuckle (Figs. D.9-D.11).

fig. D.9

fig. D.10

fig. D.11

5. Remove upper strut mount nuts and remove strut from vehicle (Figs. D.12 & D.13). Retain strut mount nuts for reinstallation.

fig. D.12

fig. D.13

INSTALLING AIR LIFT PERFORMANCE SUSPENSION

1. Begin by installing the leader line (C) into the air spring. Tighten the fitting (D) to the leader line (1 3/4 turns beyond hand-tight). Tighten the leader line into the air spring 1 3/4 turns beyond hand-tight (Fig. D.14).

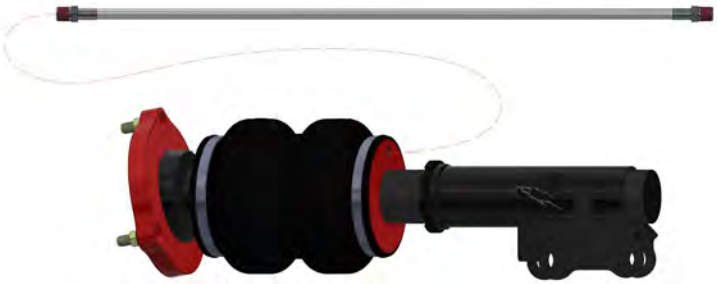

fig. D.14

2. Insert the Air Lift Performance upper strut mount into the strut tower (Fig. D.15). Install the previously removed upper mount nuts (Fig. D.16) and torque to 50Nm (37 lb.-ft.). Ensure proper orientation of the lower strut mount to the front knuckle before torquing nuts.

fig. D.15

fig. D.16

3. Slide the lower strut mount over the steering knuckle and install the lower mount bolts (Figs. D.17 & D.18). Torque the bolts to 290Nm (214 lb.-ft.).

fig. D.17

fig. D.18

4. Reinstall the sway bar end link on the Air Lift Performance strut (A or B) (Fig. D.19). Torque the sway bar end link nut to 74Nm (55 lb.-ft.).

fig. D.19

5. Install the brake hose/ABS sensor wire brackets with the previously removed bolt (Fig. D.20). Torque the bolt to 29Nm (21 lb.-ft.). Insert the ABS sensor wire clip into the retainer on the opposite side of the strut (Fig. D.21).

fig. D.20

fig. D.21

6. Reinstall wheels and torque to 103Nm (76 lb.-ft.).

ROUTING THE AIR LINES

1. Fully compress the suspension using a jack. With the suspension compressed, review the best routing for the air line that is clear of all suspension and steering components.
2. Routing should allow for the suspension to extend and steer without kinking, pulling the line tight or rubbing on other components. Following the brake line routing is often a good place to start. Check clearances to all other components.

⚠ WARNING

AFTER INSTALLATION, ENSURE ALL ORIGINAL EQUIPMENT VEHICLE SAFETY FEATURES ARE PROPERLY CALIBRATED BY A QUALIFIED TECHNICIAN. CHANGING VEHICLE HEIGHT MAY AFFECT FUNCTIONING OF SAFETY SENSORS AND CAMERAS.

E. Before Operating

SETTING THE RIDE HEIGHT

1. Refer to the User Guide supplied with this kit to set up the suspension.

Torque Specifications		
Location	Nm	lb.-ft.
Upper strut mount nuts	50	37
Lower strut mount bolts	290	214
Sway bar end link nut	74	55
Brake hose/ABS wire bracket	29	21
Wheel lugnuts	103	76

Table 1

Suggested Driving Air Pressure	Maximum Air Pressure
40-50 PSI (2.8-3.4BAR)	**125 PSI (8.6BAR)**
FAILURE TO MAINTAIN ADEQUATE MINIMUM PRESSURE (OR PRESSURE PROPORTIONAL TO LOAD) MAY RESULT IN EXCESSIVE BOTTOMING OUT AND **WILL VOID THE WARRANTY**.	

Table 2

CHECK FOR BINDING

⚠ CAUTION

MAKE SURE THE FRONT WHEELS ARE STRAIGHT WHEN DEFLATING AND REINFLATING AIR SPRINGS.

1. Inflate and deflate the system (do not exceed 125 PSI [8.6BAR]) to check for clearance or binding issues. With the air springs deflated, check clearances on everything so as not to pinch brake lines, vent tubes, etc. Clear lines if necessary.
2. Inflate the air springs to 75-90 PSI (5.2-6.2BAR) and check all connections for leaks.

INSTALLATION CHECKLIST

- ☐ **Clearance** — Inflate the air springs to 75-90 PSI (5.2-6.2BAR) and make sure there is at least 1/2" (13mm) clearance from anything that might rub against the air spring. This should be checked with the air spring fully inflated and fully deflated.
- ☐ **Leak** — Inflate the air springs to 75-90 PSI (5.2-6.2BAR) and check all connections for leaks. All leaks must be eliminated before the vehicle is road tested.
- ☐ **Heat** — Be sure there is sufficient clearance from heat sources, at least 6" (152mm) from air springs and air lines. If a heat shield was included in the kit, install it. If there is no heat shield, but one is required, call Air Lift customer service at **(800) 248-0892**.
- ☐ **Fastener** — Recheck all bolts for proper torque.
- ☐ **Road** — Inflate the air springs to recommended driving pressures (Table 2). Drive the vehicle 10 miles (16km) and recheck for clearance, loose fasteners and air leaks.
- ☐ **Operating instructions** — If professionally installed, the installer should review the operating instructions with the owner. Be sure to provide the owner with all paperwork that came with the kit.

DAMPING ADJUSTMENT

1. The dampers in this kit have 30 settings, or "clicks," of adjustable compression and rebound damping characteristics. Damping is changed through the damper rod using the supplied adjuster (Figs. E.1 & E.2) or a 3mm hex key (not included).
2. Turn the adjuster clockwise (H) and the damping settings are hardened, reducing oscillations and body motion. Turn the adjuster counterclockwise (S) and the damping is softened.
3. Each damper in this kit is preset to "-20 clicks." This means that the damper is adjusted 20 clicks away from full stiff, which starts at 0. Counting up from full stiff is the preferred method of keeping track of, or setting, damping. This setting was developed on a 2017 Toyota Camry XLE.

For more information, refer to the User Guide.

fig. E.1

fig. E.2

Notes

Limited Warranty and Return Policy

Air Lift Company provides a 1-year limited warranty to the original purchaser of Air Lift Performance damper kits from the date of original purchase, that the products will be free from defects in workmanship and materials when used on vehicles as specified by Air Lift Company and under normal operating conditions, subject to the requirements and exclusions set forth in the full Limited Warranty and Return Policy that is available online at **www.airliftperformance.com/warranty**.

For additional warranty information contact Air Lift Company customer service.

Air Lift Company reserves the right to make changes and improvements to its products and publications at any time. For the latest version of this manual, contact Air Lift Company at **(800) 248-0892** or visit **www.airliftperformance.com**.

Need Help?

The Air Lift Company customer service department is open from 8 a.m. to 8 p.m. ET Monday through Friday. Call (800) 248-0892 or (517) 322-2144 for calls from outside the U.S. and Canada.

CONNECT BY SEARCHING FOR **AIR LIFT PERFORMANCE** *#LIFEONAIR*

Thank you for purchasing Air Lift Performance products!

MADE IN USA WITH GLOBAL COMPONENTS

Air Lift Performance • 2727 Snow Road • Lansing, MI 48917 or P.O. Box 80167 • Lansing, MI 48908-0167
Toll Free (800) 248-0892 • Local (517) 322-2144 • Fax (517) 322-0240 • www.airliftperformance.com

Printed in the USA
JJC-1119

California: ⚠WARNING: Cancer and Reproductive Harm – www.P65Warnings.ca.gov

Kit 78686

Camry XV70 XSE/SE/XLE/LE

Rear Application

INSTALLATION GUIDE

For maximum effectiveness and safety, please read these instructions completely before proceeding with installation.

Failure to read these instructions can result in an incorrect installation.

MN-1115 • (011909) • ERN 9335

TABLE OF CONTENTS

A. Introduction 2
Notation Explanation 2

B. Important Safety Notices 2

C. Installation Diagram 3
Hardware List 3

D. Installing the Air Suspension 4
Removing the Rear Suspension 4
Installing the Air Suspension 6
Routing the Air Lines 9

E. Before Operating 10
Torque Specifications 10
Suggested Driving Air Pressure and Maximum Air Pressure 10
Check for Binding 10
Installation Checklist 11
Damping Adjustment 11

Limited Warranty and Return Policy 12

A. Introduction

Air Lift Performance thanks you for purchasing the most complete, fully engineered high-performance air suspension made for the Toyota Camry XV70 XSE/SE/XLE/LE. Read these installation instructions to correctly and safely set up the vehicle for a #lifeonair.

Air Lift assumes that the installer has the mechanical knowledge and ability to work on vehicle suspension systems and has basic tools necessary to complete a suspension replacement project. Special tools needed to complete the installation are noted on the *Installation Diagram* page.

Air Lift reserves the right to make changes and improvements to its products and publications at any time. For the latest version of this manual, contact Air Lift Performance at **(800) 248-0892** or visit **www.airliftperformance.com**.

An Air Lift Performance air management system is highly recommended for this product. Learn more at **air-lift.co/productlines**.

NOTATION EXPLANATION

Hazard notations appear in various locations in this publication. Information which is highlighted by one of these notations must be observed to help minimize risk of personal injury or possible improper installation which may render the vehicle unsafe. Notes are used to help emphasize areas of procedural importance and provide helpful suggestions. The following definitions explain the use of these notations as they appear throughout this guide.

DANGER — INDICATES IMMEDIATE HAZARDS WHICH WILL RESULT IN SEVERE PERSONAL INJURY OR DEATH.

WARNING — INDICATES HAZARDS OR UNSAFE PRACTICES WHICH COULD RESULT IN SEVERE PERSONAL INJURY OR DEATH.

CAUTION — INDICATES HAZARDS OR UNSAFE PRACTICES WHICH COULD RESULT IN DAMAGE TO THE VEHICLE OR MINOR PERSONAL INJURY.

NOTE — *Indicates a procedure, practice or hint which is important to highlight.*

B. Important Safety Notices

WARNING — DO NOT INFLATE AIR SPRINGS WHILE OFF OF THE VEHICLE. DAMAGE TO ASSEMBLY MAY RESULT AND VOID WARRANTY.

CAUTION — DO NOT WELD TO OR MODIFY PERFORMANCE STRUTS/SHOCKS IN ANY WAY. DAMAGE TO UNIT MAY OCCUR AND WILL VOID WARRANTY.

WARNING — AFTER INSTALLATION, ENSURE ALL ORIGINAL EQUIPMENT VEHICLE SAFETY FEATURES ARE PROPERLY CALIBRATED BY A QUALIFIED TECHNICIAN. CHANGING VEHICLE HEIGHT MAY AFFECT FUNCTIONING OF SAFETY SENSORS AND CAMERAS.

C. Installation Diagram

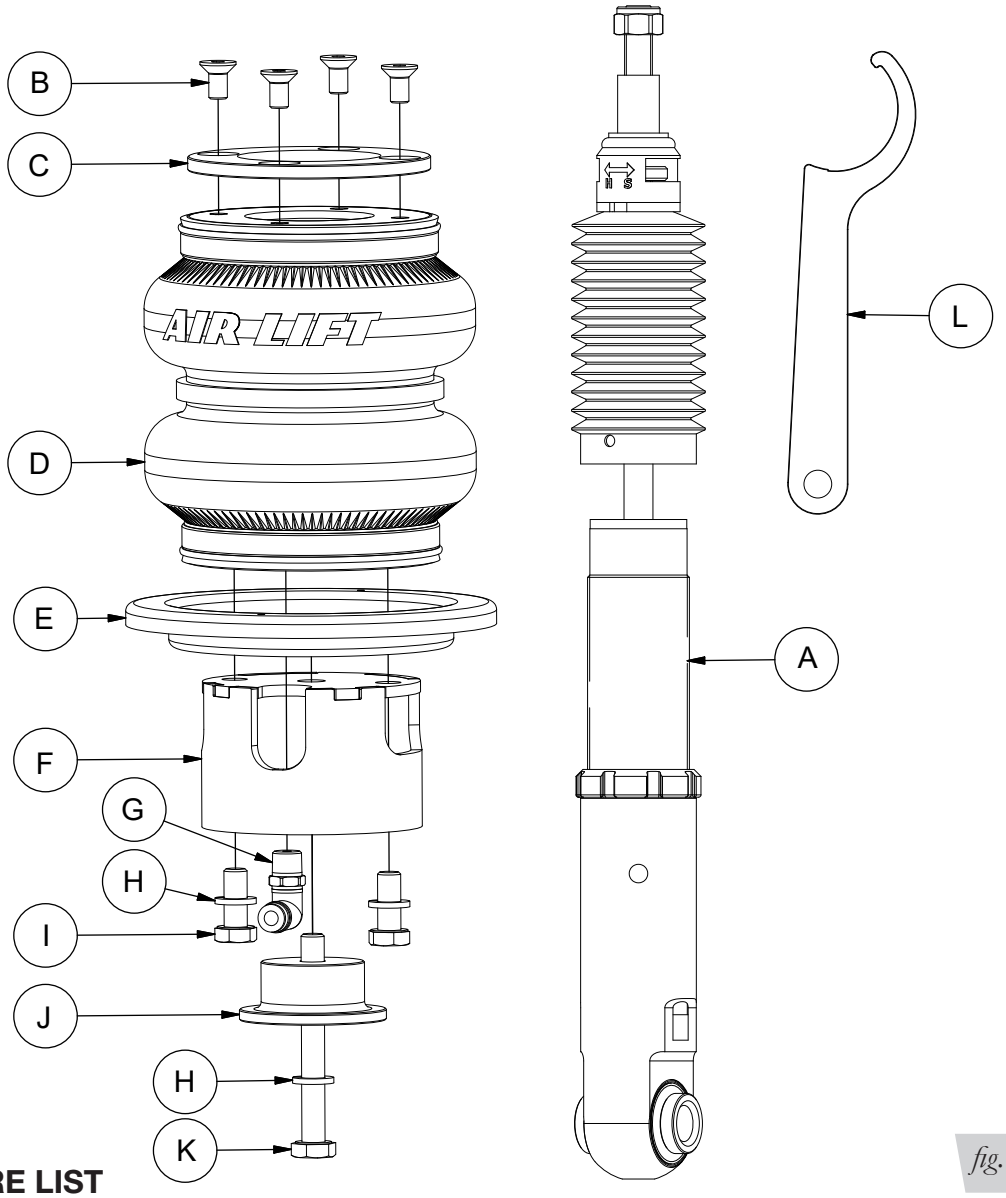

fig. C.1

HARDWARE LIST

Item	Part #	Description	Qty
A	26646	Shock, rear	2
B	17929	M8-1.25 x 16 Socket cap screw	8
C	13326	Spacer, upper	2
D	58555	Air spring	2
E	11801	Roll plate	2
F	03051	Lower bracket, rear	2
G	21779	1/4" MNPT x 1/4" PTC Elbow	2
H	18628	M10 Split lock washer	6
I	17517	M10-1.5 x 25 Hex cap screw	4
J	13996	Centering spacer	2
K	17934	M10-1.5 x 90 Hex cap screw	2
L	11291	M44 Spanner	1

STOP! Missing or damaged parts? Call Air Lift customer service at (800) 248-0892 for a replacement part.

D. Installing the Air Suspension

NOTE *See "Important Safety Notices" on page 2.*

CAUTION RAISE THE REAR OF THE VEHICLE WITH A JACK AT THE APPROVED LIFTING POINTS AND USE SAFETY STANDS TO SUPPORT THE VEHICLE.

REMOVING THE REAR SUSPENSION

1. Raise vehicle and remove the wheel (Fig. D.1). Support the lower control arm with a jack or safety stand (Fig. D.2).

fig. D.1

fig. D.2

DANGER THE COIL SPRING IS UNDER COMPRESSION. THE COIL SPRING SHOULD BE REMOVED USING FACTORY PRESCRIBED GUIDELINES.

2. Remove lower control arm outer pivot bolt (Fig. D.3) and loosen inner pivot bolt (Fig. D.4), but do not remove. Lower control arm with jack to release coil spring pressure. Remove coil spring from vehicle (Figs. D.5 & D.6).

fig. D.3

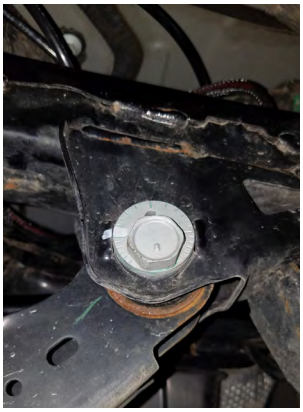

fig. D.4

fig. D.5

fig. D.6

3. Support rear knuckle with jack (Fig. D.7). Remove rear upper control arm outer pivot bolt (Figs. D.8 & D.9).

fig. D.7

fig. D.8

fig. D.9

4. Remove lower shock mount nut and upper shock mount bolts (Figs. D.10 - D.13).

fig. D.10

fig. D.11

fig. D.12

fig. D.13

5. Tilt rear knuckle away from vehicle to allow removal of rear shock (Figs. D.14 & D.15).

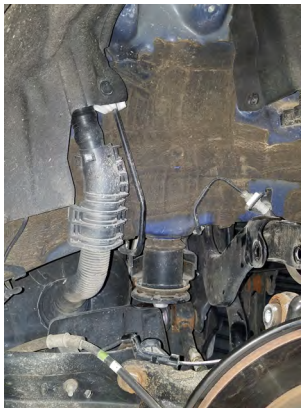

fig. D.14

fig. D.15

6. Remove upper shock mount dust cap (Fig. D.16). Loosen and remove upper shock mount nut (Fig. D.17). Remove upper mount and dust boot/jounce bumper. Separate the dust boot/jounce bumper from upper mount (Fig. D.18).

fig. D.16

fig. D.17

fig. D.18

INSTALLING THE AIR SUSPENSION

1. Install the OEM upper shock mount on the Air Lift Performance shock (A) (Figs. D.19 & D.20). Install and torque the included nylon lock nut to 20Nm (15 lb.-ft.) (Fig. D.21). Reinstall OEM dust cap (Fig. D.22).

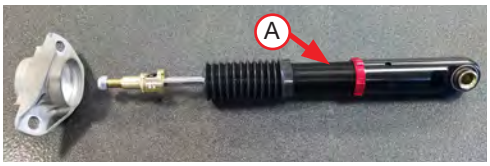

fig. D.19

fig. D.20

fig. D.21

fig. D.22

2. Install the Air Lift Performance lower shock mount onto the rear knuckle with the included lower mount spacers (Fig. D.23). Insert the the upper shock mount into the chassis and install the previously removed bolts (Fig. D.24). Torque the upper shock mount bolts to 55Nm (41 lb.-ft.) Install the lower shock mount nut but do not torque nut at this time (Fig. D.25).

fig. D.23

fig. D.24

fig. D.25

3. Reinstall the upper control arm and upper control arm outer pivot bolt (Fig. D.26). Do not torque bolt at this time.

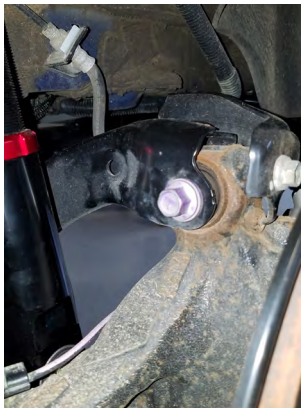

fig. D.26

4. Raise the lower control arm and reinstall the lower control arm outer pivot bolt (Fig. D.27). Do not torque bolt at this time.

fig. D.27

5. Install fitting (G) in the air spring (D). Tighten fitting 1 1/2 turns beyond hand-tight. Install roll plate (E) and lower air spring bracket (F) with two M10-1.5 x 25 hex cap screw bolts (I) and two M10 split lock washers (H) (Fig. D.28). Torque M10 bolts to 46Nm (34 lb.ft.).

fig. D.28

6. Route air line past the inner pivot bolt and through lower control arm (Fig. D.29). Insert air line into air spring fitting and place air spring into lower control arm (Fig. D.30).

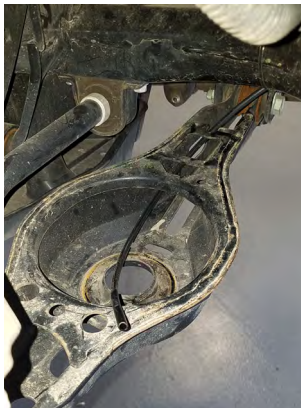

fig. D.29

fig. D.30

7. Center air spring assembly in lower control arm spring pocket (Fig. D.31). Install centering spacer (J) with M10-1.5 x 90 hex cap screw bolt (K) and M10 split lock washer (H) (Fig. D.32) and torque bolt to 46Nm (34 lb.-ft.). Ensure air line and fitting are still pointing inboard toward pivot point before torquing bolt.

fig. D.31

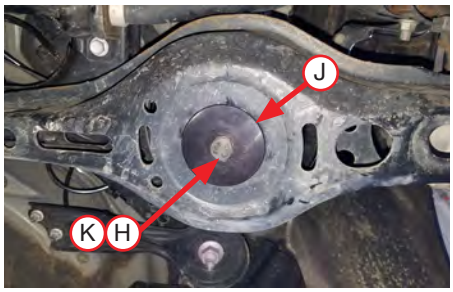

fig. D.32

8. Before reinstalling the wheel, inflate the air spring to 25 PSI (1.7BAR) to seat the upper air spring mount against the chassis (Fig. D.33).

fig. D.33

9. Reinstall the wheels and torque wheel lugnuts to 103Nm (76 lb.-ft.).
10. Torque all bolts and fasteners per the *Torque Specifications* chart (Table 1).

ROUTING THE AIR LINES

1. Fully compress the suspension using a jack. With the suspension compressed, review the best routing for the air line that is clear of all suspension components and axle.
2. Routing should also allow for the suspension to extend without kinking or pulling the line tight or rubbing on other components. Following the brake line routing is often a good place to start. Check clearances to all other components.

⚠ WARNING

AFTER INSTALLATION, ENSURE ALL ORIGINAL EQUIPMENT VEHICLE SAFETY FEATURES ARE PROPERLY CALIBRATED BY A QUALIFIED TECHNICIAN. CHANGING VEHICLE HEIGHT MAY AFFECT FUNCTIONING OF SAFETY SENSORS AND CAMERAS.

E. Before Operating

Read the User Guide that came with this kit to set up the suspension.

Torque Specifications		
Location	Nm	Lb.-ft.
Upper shock mount to Air Lift Performance shock	20	15
Upper shock mount to chassis bolts	55	41
Lower shock mount nut	125	92
Upper control arm outer pivot bolt	73	54
Lower control arm outer pivot bolt	73	54
Lower control arm inner pivot bolt	100	74
Air spring lower bracket bolts	46	34
Centering spacer bolt	46	34
Fitting	1 3/4 turns beyond hand-tight	
Wheel lugnuts	103	76

Table 1

Suggested Driving Air Pressure	Maximum Air Pressure
45-55 PSI (3.1-3.8BAR)	**125 PSI (8.6BAR)**
FAILURE TO MAINTAIN ADEQUATE MINIMUM PRESSURE (OR PRESSURE PROPORTIONAL TO LOAD) MAY RESULT IN EXCESSIVE BOTTOMING OUT AND **WILL VOID THE WARRANTY**.	

Table 2

CHECK FOR BINDING

1. Inflate and deflate the system (do not exceed 125 PSI [8.6BAR]) to check for clearance or binding issues. With the air springs deflated, check clearances on everything so as not to pinch brake lines, vent tubes, etc. Clear lines if necessary.
2. Inflate the air springs to 75-90 PSI (5.2-6.2BAR) and check all connections for leaks.

INSTALLATION CHECKLIST

- ☐ **Clearance** — Inflate the air springs to 75-90 PSI (5.2-6.2BAR) and make sure there is at least 1/2" (13mm) clearance from anything that might rub against the air spring. This should be checked with the air spring fully inflated and fully deflated.
- ☐ **Leak** — Inflate the air springs to 75-90 PSI (5.2-6.2BAR) and check all connections for leaks. All leaks must be eliminated before the vehicle is road tested.
- ☐ **Heat** — Be sure there is sufficient clearance from heat sources, at least 6" (152mm) from air springs and air lines. If a heat shield was included in the kit, install it. If there is no heat shield, but one is required, call Air Lift customer service at **(800) 248-0892**.
- ☐ **Fastener** — Recheck all bolts for proper torque.
- ☐ **Road** — Inflate the air springs to recommended driving pressures (Table 2). Drive the vehicle 10 miles (16km) and recheck for clearance, loose fasteners and air leaks.
- ☐ **Operating instructions** — If professionally installed, the installer should review the operating instructions with the owner. Be sure to provide the owner with all paperwork that came with the kit.

DAMPING ADJUSTMENT

1. The dampers in this kit have 30 settings, or "clicks," of adjustable compression and rebound damping characteristics. Damping is changed through the damper rod using the supplied adjuster (Fig. E.1) or a 3mm hex key (not included).
2. Turn the adjuster clockwise (H) and the damping settings are hardened, reducing oscillations and body motion. Turn the adjuster counterclockwise (S) and the damping is softened.
3. Each damper in this kit is preset to "-13 clicks." This means that the damper is adjusted 13 clicks away from full stiff, which starts at 0. Counting up from full stiff is the preferred method of keeping track of, or setting, damping. This setting was developed on a 2016 Toyota Camry SE.

For more information, refer to the User Guide.

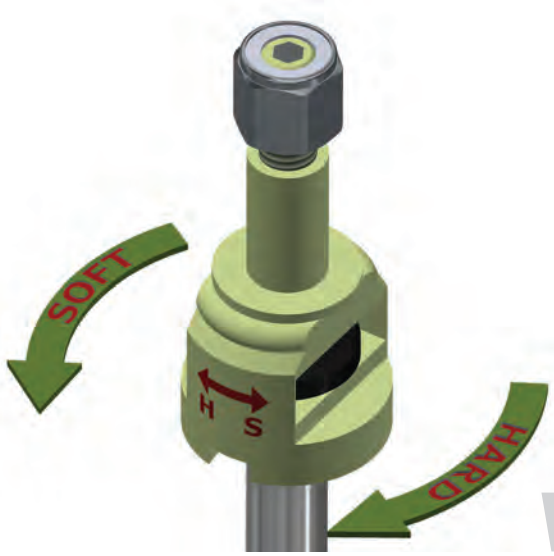

fig. E.1

Limited Warranty and Return Policy

Air Lift Company provides a 1-year limited warranty to the original purchaser of Air Lift Performance damper kits from the date of original purchase, that the products will be free from defects in workmanship and materials when used on vehicles as specified by Air Lift Company and under normal operating conditions, subject to the requirements and exclusions set forth in the full Limited Warranty and Return Policy that is available online at **www.airliftperformance.com/warranty**.

For additional warranty information contact Air Lift Company customer service.

Air Lift Company reserves the right to make changes and improvements to its products and publications at any time. For the latest version of this manual, contact Air Lift Company at **(800) 248-0892** or visit **www.airliftperformance.com**.

Need Help?

The Air Lift Company customer service department is open from 8 a.m. to 8 p.m. ET Monday through Friday. Call (800) 248-0892 or (517) 322-2144 for calls from outside the U.S. and Canada.

CONNECT BY SEARCHING FOR **AIR LIFT PERFORMANCE** *#LIFEONAIR*

Thank you for purchasing Air Lift Performance products!

MADE IN USA WITH GLOBAL COMPONENTS

Air Lift Performance • 2727 Snow Road • Lansing, MI 48917 or P.O. Box 80167 • Lansing, MI 48908-0167
Toll Free (800) 248-0892 • Local (517) 322-2144 • Fax (517) 322-0240 • www.airliftperformance.com

Printed in the USA
JJC-0919

California: ⚠WARNING: Cancer and Reproductive Harm – www.P65Warnings.ca.gov