Kit 78554

Mini Cooper R55/R56/R57

Front Application

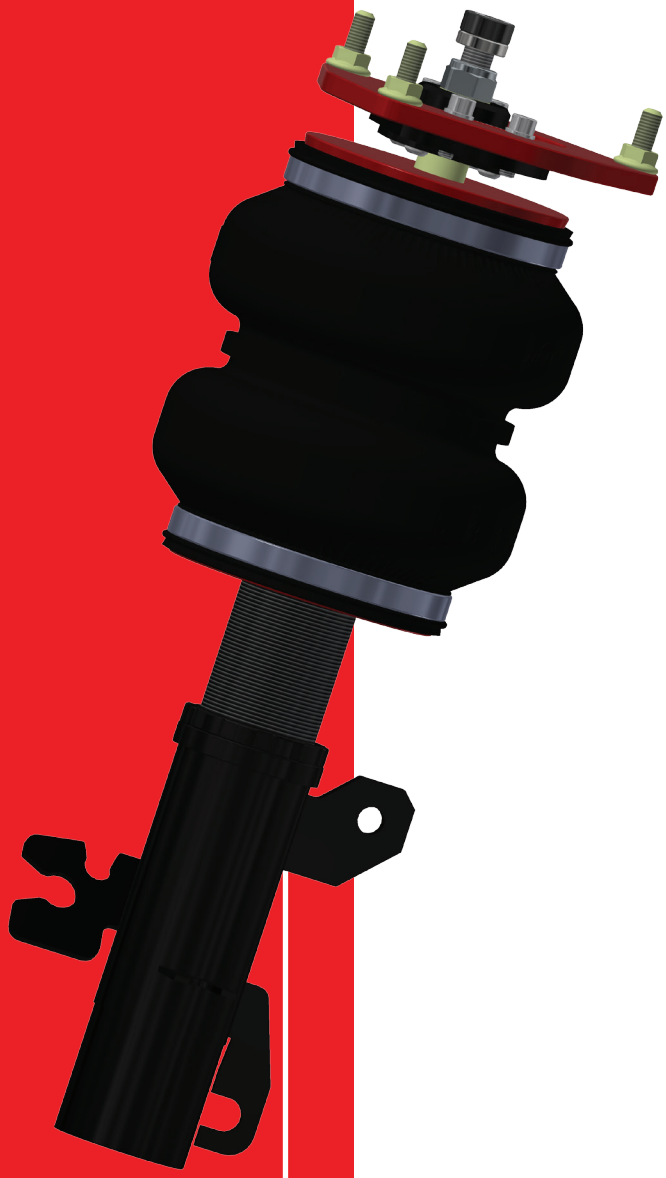

INSTALLATION GUIDE

For maximum effectiveness and safety, please read these instructions completely before proceeding with installation.

Failure to read these instructions can result in an incorrect installation.

MN-1017 • (011607) • ERN 8293

TABLE OF CONTENTS

Introduction 2
Notation Explanation 2

Important Safety Notices 2

Installation Diagram 3
Hardware List 3

Installing the Air Suspension 4
Preparing the Vehicle 4
Removing the Headlight Alignment Assembly 4
Removing the Stock Suspension 5
Air Suspension Installation 6
Reinstalling the Headlight Alignment Assembly 7
Routing the Air Lines 8

Before Operating 9
Setting the Ride Height 9
Torque Specifications 9
Suggested Driving and Maximum Air Pressures 9
Check for Binding 10
Damping Adjustment 10
Aligning the Vehicle 10
Adjusting Extended or Drop Height Using Lower Mount 11
Installation Checklist 12
Post-Installation Checklist 12

Use, Maintenance and Servicing 13
Tuning the Air Pressure 13

Troubleshooting Guide 14
Tips for Installing Air Lines 15
Checking for Leaks 15
Fixing Leaks 15

Limited Warranty and Return Policy 16

Replacement Part Information 17

Contact Information 17

Introduction

Air Lift Performance thanks you for purchasing the most complete, fully engineered high-performance air suspension made for the Mini Cooper R55/R56/R57. Read these installation instructions to correctly and safely set up the vehicle for a #lifeonair.

Air Lift assumes that the installer has the mechanical knowledge and ability to work on vehicle suspension systems and has basic tools necessary to complete the project. Special tools needed to complete the installation are noted on the Installation Diagram page.

Air Lift reserves the right to make changes and improvements to its products and publications at any time. For the latest version of this manual, contact Air Lift Performance at **(800) 248-0892** or visit **www.airliftperformance.com**.

An Air Lift Performance air management system is highly recommended for this product. Learn more at air-lift.co/productlines.

NOTATION EXPLANATION

Hazard notations appear in various locations in this publication. Information which is highlighted by one of these notations must be observed to help minimize risk of personal injury or possible improper installation which may render the vehicle unsafe. Notes are used to help emphasize areas of procedural importance and provide helpful suggestions. The following definitions explain the use of these notations as they appear throughout this guide.

DANGER — INDICATES IMMEDIATE HAZARDS WHICH WILL RESULT IN SEVERE PERSONAL INJURY OR DEATH.

WARNING — INDICATES HAZARDS OR UNSAFE PRACTICES WHICH COULD RESULT IN SEVERE PERSONAL INJURY OR DEATH.

CAUTION — INDICATES HAZARDS OR UNSAFE PRACTICES WHICH COULD RESULT IN DAMAGE TO THE MACHINE OR MINOR PERSONAL INJURY.

NOTE — *Indicates a procedure, practice or hint which is important to highlight.*

Important Safety Notices

WARNING — DO NOT INFLATE AIR SPRINGS WHILE OFF OF THE VEHICLE. DAMAGE TO ASSEMBLY MAY RESULT AND VOID WARRANTY.

CAUTION — DO NOT WELD TO OR MODIFY PERFORMANCE STRUTS/SHOCKS IN ANY WAY. DAMAGE TO UNIT MAY OCCUR AND WILL VOID WARRANTY.

Installation Diagram

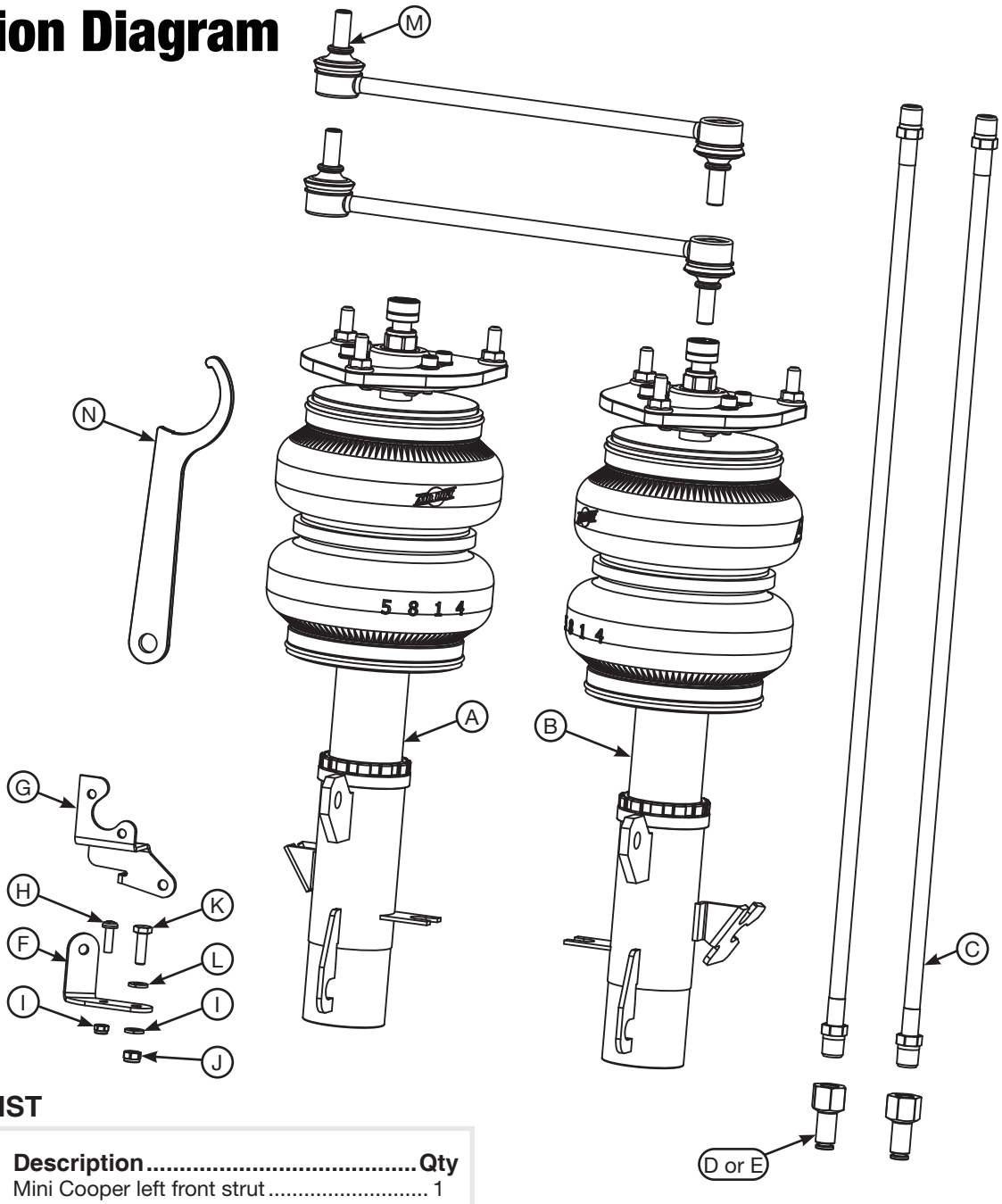

fig. 1

HARDWARE LIST

Item	Part #	Description	Qty
A	35400	Mini Cooper left front strut	1
B	35401	Mini Cooper right front strut	1
C	20997	Leader hose, 1/4” ID	2
D	21810	Union, 1/4” FNPT x 1/4” PTC, DOT	2
E	21987	Union, 1/4” FNPT x 3/8” PTC, DOT	2
F	11142	Lower headlight alignment sensor bracket	1
G	11143	Upper headlight alignment sensor bracket	1
H	17394	M5-0.80 x 16 pan head screw	1
I	18575	M5-0.80 nylon lock nut	1
J	18569	M6-1 nylon lock nut	1
K	17475	M6-1 x 20 hex cap screw	1
L	18578	M6 lock washer	2
M	26733-009	End link - 260mm	2
N		Spanner wrench	1

STOP! Missing or damaged parts? Call Air Lift customer service at (800) 248-0892 for a replacement part.

Installing the Air Suspension

PREPARING THE VEHICLE

1. Elevate and support the vehicle using its approved lifting points.
2. Remove the front wheels (Fig. 2).

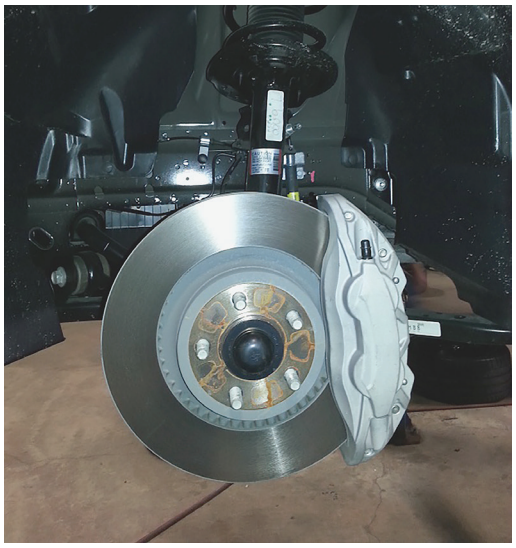

fig. 2

REMOVING THE HEADLIGHT ALIGNMENT ASSEMBLY

NOTE *If the vehicle is NOT equipped with the headlight alignment system, skip to Removing the Stock Suspension.*

1. Note the headlight sensor arm orientation to the electrical connector. You'll need to know the orientation for reinstallation. Disconnect the sensor connector.
2. Unbolt the sensor linkage bracket from the lower control arm and the sensor bracket from the chassis. Remove the assembly and separate the sensor and linkage from the brackets (Fig. 3).

fig. 3

REMOVING THE STOCK SUSPENSION

1. Unclip the sensor wire and brake line from the strut (Figs. 4 & 5).

fig. 4

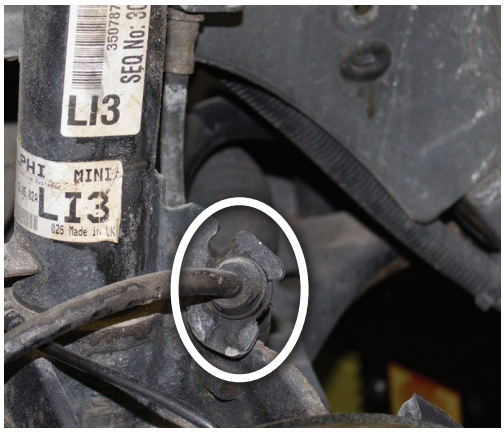

fig. 5

2. Unthread the stabilizer bar end link nuts from the strut and bar. Note the orientation and placement of link. Remove the end link (Fig. 6).

fig. 6

3. Support the hub and remove the lower strut bolt (Fig. 7).

fig. 7

4. Within the engine compartment, unthread the three upper mount nuts and remove the strut from the vehicle (Fig. 8).

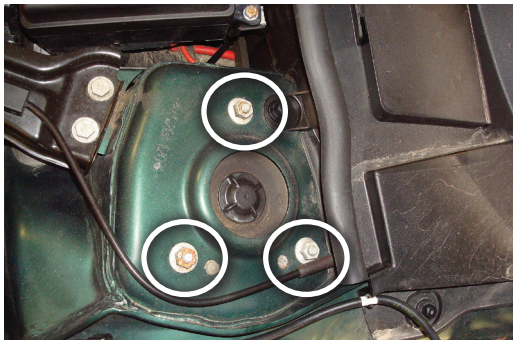

fig. 8

AIR SUSPENSION INSTALLATION

1. Begin by installing the leader line into the air spring. Apply thread sealant to the threads of the leader line. Tighten the appropriate fitting to the air line 1 3/4 turns beyond hand tight). Tighten the leader line into the air spring (1 3/4 turns beyond hand tight) (Fig. 9).

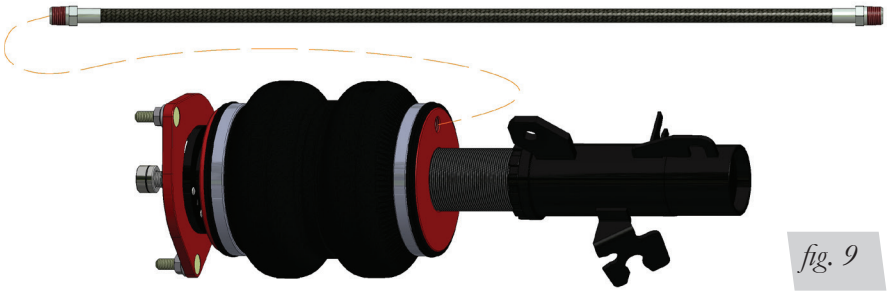

fig. 9

2. Attach the camber plate to the strut tower (Fig. 10) and torque nuts to 34Nm (25 lb.-ft.).

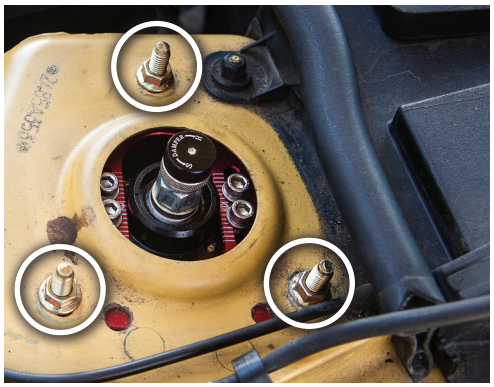

fig. 10

3. Fully seat the strut into the knuckle and reinstall the lower mount bolt (Fig. 11). Torque to 100Nm (74 lb.-ft.).

fig. 11

NOTE *If camber is adjusted in the negative direction with the camber plates, check clearance around the inflated air spring throughout the suspension travel.*

⚠ CAUTION

ANY CONTACT WITH THE AIR SPRING WILL CAUSE PREMATURE WEAR AND VOIDS THE WARRANTY.

4. Install the new stabilizer end link in same orientation as the original (Figs. 12, 13 & 14). Torque nuts to 56Nm (41 lb.-ft.).

fig. 12

fig. 13

fig. 14

5. Clip the sensor wire and brake line back into the attaching points on the strut. (Figs. 15 & 16).

fig. 15

fig. 16

REINSTALLING THE HEADLIGHT ALIGNMENT ASSEMBLY

1. If equipped, attach the sensor to the supplied bracket. Torque bolts to 4.4Nm (39 lb.-in.). Attach the linkage to the supplied lower bracket. Torque nut to 7.2Nm (63.7 lb.-in.) (Figs. 17 & 18). If the vehicle is not equipped with the headlight alignment system, skip to Routing the Air Lines.

fig. 17

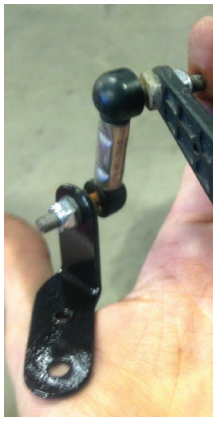
fig. 18

2. Attach the sensor bracket to the chassis. Torque to 7.6Nm (67.3 lb.-in.) (Fig. 19).

fig. 19

3. With the sensor arm in the same orientation as previously removed, align and attach the linkage bracket to the lower control arm bolt holes as shown. Torque the M6 bolt to 6Nm (53 lb.-in.). Torque the M5 bolt to 4.4Nm (39 lb.-in.) (Fig. 20). Reattach the sensor connector.

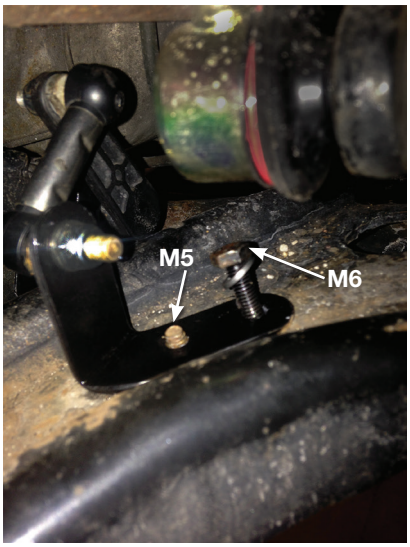

fig. 20

ROUTING THE AIR LINES

1. Fully compress the suspension using a jack. With the suspension compressed, review the best routing for the leader hose that is clear of all suspension and steering components.
2. Routing should allow for the suspension to extend and steer without kinking, pulling the line tight or rubbing on other components. Following the brake line routing is often a good place to start. Check clearances to all other components.

Before Operating

SETTING THE RIDE HEIGHT

1. With the suspension fully compressed, take a measurement from the fender to a chosen reference point – typically the center of the axle. Record this measurement as max compression (MC).
2. Cycle the suspension to max extension (ME) and record the measurement from the fender to the same reference point.
3. Add ME and MC, then divide the total by 2. Set the suspension to this point. This position will give 50% stroke in either direction and is a starting point for ride height (Fig. 21).

Formula for Calculating Ride Height
(ME+MC)÷2=MID STROKE

fig. 21

4. With the suspension at this position, loosen, then re-torque all suspension bushing pivot joint fasteners to the manufacturer's specifications (Table 1):

Torque Specifications			
Location	Nm	lb.-ft.	lb.-in.
Camber plate to chassis nuts	34	25	-
Strut lower mount bolt/nuts	100	74	-
Stabilizer end link nuts	56	41	-
Headlight alignment sensor to bracket bolts	4.4	-	39
Linkage to bracket nut	7.2	-	63.7
Headlight alignment sensor bracket to chassis	7.6	-	67.3
Linkage bracket to control arm M6 bolt	6	-	53
Linkage bracket to control arm M5 bolt	4.4	-	39
Wheel lugs	140 +/- 10	103 +/- 10	-
Camber plate bolts	10	7	-
Leader line threads (use thread sealant)	1 3/4 turn beyond hand tight		

Table 1

Suggested Driving Air Pressure	Maximum Air Pressure
35-55 PSI	**125 PSI**
FAILURE TO MAINTAIN ADEQUATE MINIMUM PRESSURE (OR PRESSURE PROPORTIONAL TO LOAD) MAY RESULT IN EXCESSIVE BOTTOMING OUT AND **WILL VOID THE WARRANTY**.	

Table 2

CHECK FOR BINDING

1. Inflate and deflate the system (do not exceed 125 PSI) to check for clearance or binding issues. With the air springs deflated, check clearances on everything so as not to pinch brake lines, vent tubes, etc. Clear lines if necessary.
2. Inflate the air springs to 75-90 PSI and check all connections for leaks.

⚠ CAUTION

MAKE SURE THE FRONT WHEELS ARE STRAIGHT WHEN DEFLATING AND REINFLATING AIR BAGS.

DAMPING ADJUSTMENT

Suspension damping is a matter of compromise. Setting it too stiff will make the ride feel jarring. In addition, if the suspension is too stiff, the tires will lose contact with the road, reducing control and power delivery. On the other hand, if the suspension is too soft, the car can experience brake dive and excessive bouncing. The sweet spot lies somewhere in the middle. Air Lift dampers have a range of adjustment, which allows the driver to tune the ride and handling to his or her preferences.

Air Lift recommends damper and air pressure settings for every vehicle kit, but it is impossible to consider every situation. For example, even though Air Lift kits replace the dampers and springs, vehicles with sport-tuned suspensions might have stiffer bushings, larger anti-roll bars, bigger wheels, wider tires, etc. These settings may need to be adjusted to different vehicles and driving characteristics.

1. The dampers in this kit have 30 settings, or “clicks,” of adjustable compression and rebound damping characteristics. Damping is changed through the damper rod using the supplied adjuster (Figs. 22 & 23) or an 3mm hex key (not included).
2. Turn the adjuster clockwise (H) and the damping settings are hardened, reducing oscillations and body motion. Turn the adjuster counterclockwise (S) and the damping is softened.
3. Each damper in this kit is preset to “-20 clicks.” This means that the damper is adjusted 20 clicks away from full stiff, which starts at 0. Counting up from full stiff is the preferred method of keeping track of, or setting, damping. This setting was developed on a 2007 Mini Cooper S.

fig. 22

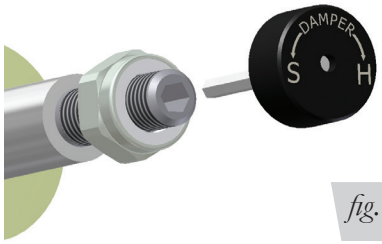

fig. 23

ALIGNING THE VEHICLE

1. Set the vehicle to the height at which it will most often be driven.
2. If the ride height is lower than stock, Air Lift Performance recommends loosening all pivot points (bolts, nuts) on any control arm, strut arm or radius rod that contains bushings. Once they have been loosened, re-torque to stock specifications (Table 1).

NOTE

It may be necessary to cycle the suspension to loosen the bushing from its mount. This will help re-orient the bushing at its new position based on the chosen ride height.

3. Get a shop alignment of the vehicle at the new chosen ride height.

ADJUSTING EXTENDED OR DROP HEIGHT USING LOWER MOUNT

These dampers have been pre-set at the factory to provide maximum drop height while maintaining adequate tire clearance to the air spring. If you wish to gain more extended height (lift), which is the same as reducing drop height, or want to lower the chassis further and there is still adjustment available at the lower mount, please use the following procedure:

1. Support the vehicle with jack stands or a hoist at approved lifting points.
2. Remove the wheel.
3. Using the supplied spanner wrench, loosen the locking collar (Fig. 24).
4. Deflate the air spring to 0 PSI on the corner you are adjusting.
5. Disconnect lower mount from suspension.
6. Spin the lower mount to the desired location.

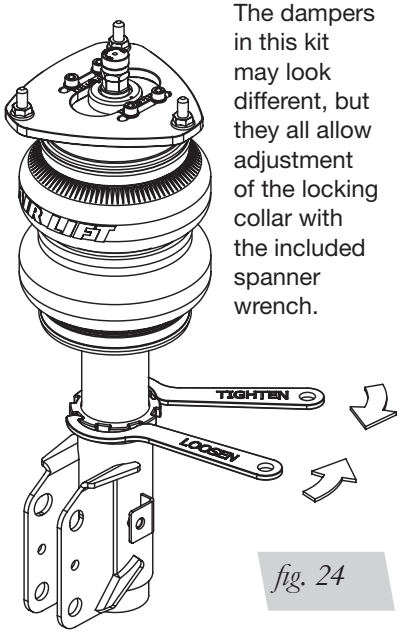

The dampers in this kit may look different, but they all allow adjustment of the locking collar with the included spanner wrench.

fig. 24

NOTE

Not all vehicles will have further drop height available.

7. Re-install lower mount to suspension and torque fasteners.
8. Tighten the lower locking collar to the lower mount using significant force.

⚠ CAUTION

WHEN ADJUSTING HEIGHT UPWARD, MAKE SURE THAT THE DAMPER BODY ENGAGES ALL THE THREADS OF THE LOWER MOUNT (FIG. 25). WHEN ADJUSTING DOWNWARD, MAKE SURE THERE IS ADEQUATE AIR SPRING CLEARANCE TO THE TIRE/WHEEL ASSEMBLY. CLEARANCE MUST BE CHECKED WITH SYSTEM FULLY DEFLATED AS WELL AS FULLY INFLATED TO ENSURE THAT NO RUBBING OCCURS. FAILURE TO MAINTAIN ADEQUATE CLEARANCE CAN RESULT IN AIR SPRING FAILURE AND WILL NOT BE COVERED UNDER WARRANTY.

⚠ CAUTION

DO NOT ADJUST HEIGHT BY SPINNING AIR SPRING ON DAMPER! DOING SO MAY CAUSE AN AIR LEAK AND COMPROMISE THE ASSEMBLY.

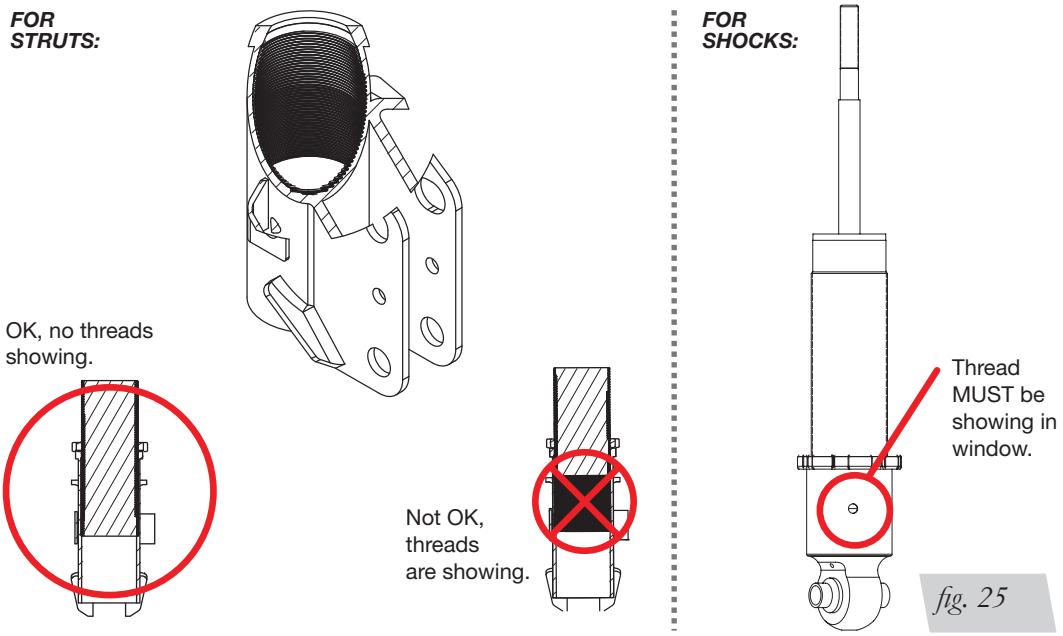

fig. 25

INSTALLATION CHECKLIST

- ☐ **Clearance** — Inflate the air springs to 75-90 PSI and make sure there is at least 1/2" clearance from anything that might rub against the air spring. This should be checked with the air spring fully inflated and fully deflated.

- ☐ **Leak** — Inflate the air springs to 75-90 PSI and check all connections for leaks. All leaks must be eliminated before the vehicle is road tested.

- ☐ **Heat** — Be sure there is sufficient clearance from heat sources, at least 6" for air springs and air lines. If a heat shield was included in the kit, install it. If there is no heat shield, but one is required, call Air Lift customer service at **(800) 248-0892**.

- ☐ **Fastener** — Recheck all bolts for proper torque.

- ☐ **Road** — Inflate the springs to recommended driving pressures. Drive the vehicle 10 miles and recheck for clearance, loose fasteners and air leaks.

- ☐ **Operating instructions** — If professionally installed, the installer should review the operating instructions with the owner. Be sure to provide the owner with all paperwork that came with the kit.

POST-INSTALLATION CHECKLIST

- ☐ **Overnight leak down test** — Recheck air pressure 24 hours after installation and driving of the vehicle. If the pressure has dropped more than 5 PSI, there is a leak that must be fixed.

- ☐ **Air pressure requirements** — It is important to understand the air pressure requirements of the air spring system. Regardless of load, the air pressure should always be adjusted to maintain adequate ride height at all times while driving.

- ☐ **Thirty-day or 500-mile test** —Recheck the air spring system after 30 days or 500 miles, whichever comes first. If any part shows signs of rubbing or abrasion, the source should be identified and moved, if possible. If it is not possible to relocate the cause of the abrasion, the air spring may need to be remounted. If professionally installed, the installer should be consulted. Check all fasteners for tightness.

Use, Maintenance and Servicing

1. An Air Lift air management system is strongly recommended for this product, but it is possible to operate without one. The air lines can be routed to Schrader valves for use with a separate air compressor. Air lines and Schrader valves are not included with Air Lift Performance kits and would need to be purchased separately. To learn more about Air Lift management systems visit air-lift.co/productlines.
2. Check the air pressure before driving.

⚠ WARNING

BEFORE SERVICING THE VEHICLE, MAKE SURE TO TURN OFF “RISE ON START” AND “PRESET MAINTAIN.” THIS WILL ELIMINATE ANY UNINTENDED SUSPENSION CYCLING IF YOU NEED TO TURN THE KEY ON IN THE VEHICLE FOR ANY REASON.

TUNING THE AIR PRESSURE.

Pressure determination comes down to three things — level vehicle, ride comfort and stability.

1. **Level vehicle**

   Depending on load, it is possible one side will need more pressure than the other to level the vehicle.

2. **Ride comfort**

   If the vehicle has a harsh ride, it may be due to either too much pressure or not enough causing frequent bottoming out. Also, riding the vehicle at the top, or close to the top of the available stroke will cause an uncomfortable ride due to a lack of rebound travel. This situation should be avoided for driving any significant distance. Try different pressures to determine the best ride comfort. See the Air Lift suggested driving air pressure for this vehicle (Table 2).

3. **Stability**

   Stability translates into safety and should be the priority, meaning the driver may need to sacrifice a perfectly level and comfortable ride. Stability issues include roll control, bounce, dive during braking and sponginess. Tuning out these problems usually requires additional air pressure, damping or both.

Troubleshooting Guide

PROBLEM	CAUSE	SOLUTION
Air spring won't maintain pressure.	Leak at fitting, air line not cut properly or damage to air line during installation.	Find location of leak by spraying listed components with soapy water solution and look for bubbles. Tighten air fitting, re-cut air line or replace damaged components.
	Leak at lower O-ring on damper if air spring is over the damper.	Spray bottom of air spring with soapy water solution and look for bubbles. Contact Air Lift customer service at **(800) 248-0892** to determine if component should be replaced.
Knocking noise when hitting bumps.	Loose suspension component such as locking collar on damper.	Tighten lower locking collar with significant force, check and tighten suspension components to factory specs at desired ride height.
	Driving vehicle too close to maximum extension.	Check current ride height and compare to maximum height. If there is less than 1" (25mm) difference, reduce air pressure to lower ride height.
		Lengthen strut or shock to increase available up travel.
Suspension bottoms out.	Air pressure is too low, causing air springs to bottom out.	Raise air pressure.
The ride is too bouncy.	Air pressure is too high, causing air springs to be too stiff.	Lower air pressure and adjust damper length if necessary to achieve proper ride height.
	Damping is inadequate.	Increase damping with adjusters.
The ride is too soft or floaty.	Damping is inadequate.	
The ride is too harsh.	Excessive damping.	Reduce damping with adjusters.

TIPS FOR INSTALLING AIR LINES

When cutting air lines, use a sharp knife or a hose cutter and make clean, square cuts (Fig. 26). Do not use scissors or wire cutters because these tools will deform the air line, causing it to leak around fittings. Do not cut the lines at an angle.

Do not bend the 1/4" hose at a radius of less than 1" and do not put side load pressure on fitting. The hose should be straight beyond the fitting for 1" before bending.

Inspect hose for scratches that run lengthwise on hose prior to installation. Contact Air Lift customer service at **(800) 248-0892** if the air line is damaged.

To watch a video demonstrating proper air line cutting, go to air-lift.co/cuttingairline

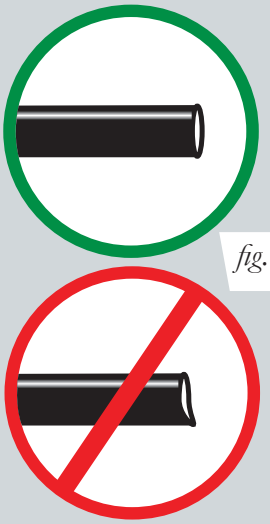

fig. 26

CHECKING FOR LEAKS

1. Inflate the air spring to at least 80 PSI.
2. Spray all connections with a solution of 1/5 liquid dish soap and 4/5 water. Spot leaks easily by looking for bubbles in the soapy water.
3. Check the air pressure again after 24 hours. A 2-4 PSI loss after initial installation is normal. Retest for leaks if the loss is more than 5 PSI.

FIXING LEAKS

1. **Air line to PTC fitting**: Try pushing the air line firmly into the fitting to ensure it is properly seated. If leak persists, deflate the spring and remove the air line by pushing the collar toward the fitting body and pulling firmly on the air line. Trim 1" off the end of the air line making sure the cut is clean and square. Reinsert air line firmly into fitting and pull back on the air line to make sure it is seated.
2. **Threaded connection**: If possible, tighten the fitting another half turn. If the leak persists, deflate spring, remove fitting and re-coat threads with thread sealant. Reinstall to hand tight and then use wrench to finish tightening an additional 1 3/4 turns.
3. **Air spring O-ring seal**: If a leak is found at the upper or lower air spring seal on a strut or shock, contact Air Lift customer service at **(800) 248-0892.**

Limited Warranty and Return Policy

WHAT THIS WARRANTY COVERS

Air Lift Company warrants to the original purchaser for a period of one year from the date of original purchase that the Air Lift Performance damper kits will be free from defects in workmanship and materials for the normal expected life of the part when used on cars and trucks as specified by Air Lift Company and under normal operating conditions, subject to the requirements and exclusions set forth below.

WHAT THIS WARRANTY DOES NOT COVER

The warranty does not apply to products that have been improperly applied, improperly installed, or which have not been maintained in accordance with installation instructions furnished with all products. This warranty does not apply and is void if damage or failure is caused by: accident, abuse, misuse (including but not limited to racing or off-road activities or commercial use), abnormal use, faulty installation, liquid contact, fire, earthquake or other external cause; operating the product outside Air Lift Company's instructions, specifications or guidelines; or service, alteration, maintenance or repairs performed by anyone other than Air Lift Company to the product from its purchased condition. This warranty also does not apply to: Universal Air (Fabricator Kits), consumable parts, such as batteries; cosmetic damage, including but not limited to scratches or dents; defects caused by normal wear and tear or otherwise due to the normal aging of the product, or if any serial or identification number has been removed or defaced from the product. Air Lift Company reserves the right to change the design of any product without assuming any obligation to modify any product previously manufactured.

LIMITATION OF LIABILITY

To the extent permitted by law, this warranty and the remedies set forth herein are exclusive and in lieu of all other warranties, remedies and conditions, whether oral, written, statutory, express or implied. AIR LIFT COMPANY DISCLAIMS ALL STATUTORY AND IMPLIED WARRANTIES, INCLUDING WITHOUT LIMITATION, WARRANTIES OF MERCHANTABILITY AND FITNESS FOR A PARTICULAR PURPOSE AND WARRANTIES AGAINST HIDDEN OR LATENT DEFECTS TO THE EXTENT PERMITTED BY LAW. To the extent such warranties cannot be disclaimed, such implied warranties shall apply only for the warranty period specified above. Please note that some states do not allow limitation on how long an implied warranty (or condition) lasts. So the above limitation may not apply to you.

Except as provided in this warranty and to the extent permitted by law, Air Lift Company shall not be liable for any direct, special, incidental or consequential damages resulting from any breach of warranty or condition, or arising in connection with the sale, use or repair of air lift products, or under any other legal theory, including but not limited to loss of use, loss of revenue, loss of actual or anticipated profits, loss of the use of money, loss of business, loss of opportunity, loss of goodwill, and loss of reputation. Air Lift Company's maximum liability shall not in any case exceed the purchase price paid by you for the Air Lift product. Please note that some states do not allow the exclusion or limitation of incidental or consequential damages, so the above limitation or exclusion may not apply to you.

HOW TO GET SERVICE

If a defect in workmanship or materials causes your Air Lift Performance product to become inoperable within the warranty period, before returning any defective product, call Air Lift Company at (800) 248-0892 in the U.S. and Canada (elsewhere, (517) 322-2144) to obtain a Returned Materials Authorization (RMA) number. The consumer shall be responsible for removing (labor charges) the defective product from the vehicle and returning it, shipping costs prepaid, to Air Lift Company for verification. Returns to Air Lift Company must be postage prepaid and sent to: Air Lift Company • 2727 Snow Road • Lansing, MI • 48917. You must prove to the satisfaction of Air Lift Company the date of original purchase of your Air Lift Performance product. You must also enclose the RMA number and a return address. A minimum $10 shipping and handling charge will apply to all warranty claims. You must also pack the product to minimize the risk of it being damaged in transit. If we receive a product in damaged condition as the result of shipping, we will notify you and you must seek a claim with the shipper.

WHAT AIR LIFT COMPANY WILL DO

If you submit a valid claim to Air Lift Company during the warranty period, Air Lift Company will, at its option, repair your Air Lift Performance product or furnish you with a new or rebuilt product. Air Lift Company will not reimburse you for repairs or replacement parts provided by other parties. Your repaired or replacement Air Lift Performance product will be returned to you (subject to payment of the required warranty claim shipping and handling charge) and it will be covered under the warranty for the balance of the warranty period, if any. When a product or part is replaced, any replacement item becomes your property and the replaced item becomes property of Air Lift Company. You are responsible for installation/reinstallation (labor charges) of the product.

HOW THE LAW RELATES TO THIS WARRANTY

This warranty gives you specific legal rights and you may also have other rights which vary from state to state. By this warranty, Air Lift Company does not limit or exclude your rights except as allowed by law. To fully understand your rights, you should consult the laws of your state.

Replacement Part Information

If replacement parts are needed, contact Air Lift customer service at **(800) 248-0892**. Most parts are immediately available and can be shipped the same day.

Contact Air Lift Company customer service at (800) 248-0892 first if:

- Parts are missing from the kit.
- Need technical assistance on installation or operation.
- Broken or defective parts in the kit.
- Wrong parts in the kit.
- Have a warranty claim or question.

Contact the retailer where the kit was purchased:

- If it is necessary to return or exchange the kit for any reason.
- If there is a problem with shipping if shipped from the retailer.
- If there is a problem with the price.

Contact Information

Mailing address	P.O. Box 80167 Lansing, MI 48908-0167
Shipping address for returns	2727 Snow Road Lansing, MI 48917
Phone	Toll free: (800) 248-0892 International: (517) 322-2144
Email	service@airliftcompany.com
Web address	www.airliftcompany.com

Need Help?

Contact Air Lift Company customer service department by calling (800) 248-0892. For calls from outside the USA or Canada, dial (517) 322-2144.

Connect by searching for **Air Lift Performance** *#LifeonAir*

Thank you for purchasing Air Lift Performance products!

Air Lift Performance • 2727 Snow Road • Lansing, MI 48917 or P.O. Box 80167 • Lansing, MI 48908-0167
Toll Free (800) 248-0892 • Local (517) 322-2144 • Fax (517) 322-0240 • www.airliftperformance.com

Printed in the USA
BGL-0916

Kit 78654

Mini Cooper R55/R56/R57

Rear Application

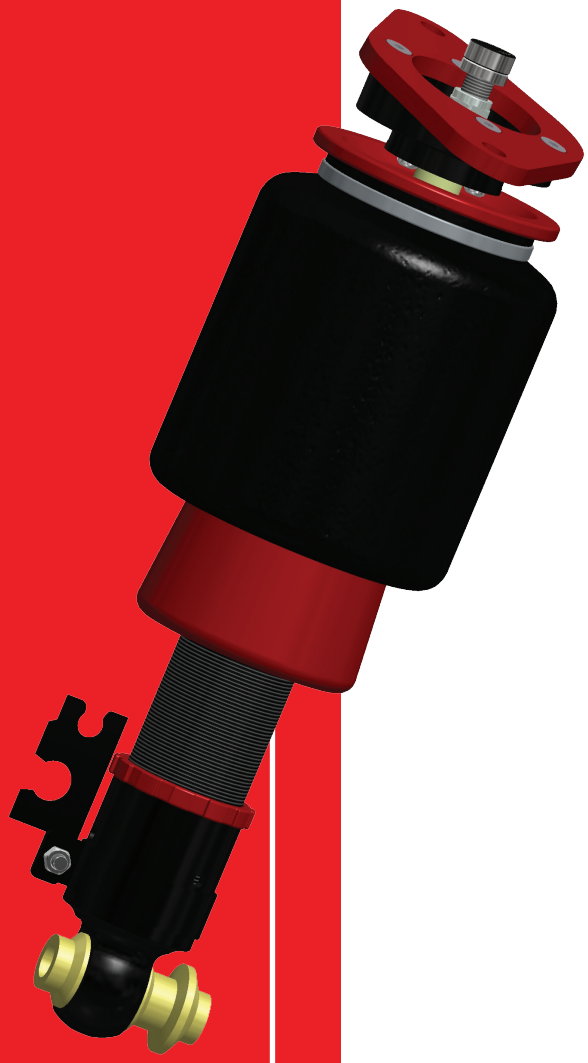

INSTALLATION GUIDE

SEE PAGE 13 FOR IMPORTANT INFORMATION ABOUT SLEEVE-STYLE DAMPERS BEFORE INSTALLATION.

For maximum effectiveness and safety, please read these instructions completely before proceeding with installation.

Failure to read these instructions can result in an incorrect installation.

MN-1018 • (011607) • ERN 8293

TABLE OF CONTENTS

Introduction 2
Notation Explanation 2

Important Safety Notices 2

Installation Diagram 3
Hardware List 3

Installing the Air Suspension 4
Preparing the Vehicle 4
Removing the Stock Suspension 4
Installing the Damping Adjusters 5
Installing the Kit Components 6
Routing the Air Lines 9

Before Operating 9
Setting the Ride Height 9
Torque Specifications 9
Suggested Driving Air Pressure and Maximum Air Pressure 9
Check for Binding 10
Damping Adjustment 10
Aligning the Vehicle 10
Adjusting Extended or Drop Height Using Lower Mount 11
After Initial Installation of Sleeve-style Dampers 13
Installation Checklist 14
Post-installation Checklist 14

Use, Maintenance and Servicing 15
Tuning the Air Pressure 15

Troubleshooting Guide 16
Tips for Installing Air Lines 17
Checking for Leaks 17
Fixing Leaks 17

Limited Warranty and Return Policy 20

Replacement Part Information 21

Contact Information 21

Introduction

Air Lift Performance thanks you for purchasing the most complete, fully engineered high-performance air suspension made for the Mini Cooper R55/R56/R57. Read these installation instructions to correctly and safely set up the vehicle for a #lifeonair.

Air Lift assumes that the installer has the mechanical knowledge and ability to work on vehicle suspension systems and has basic tools necessary to complete the project. Special tools needed to complete the installation are noted on the Installation Diagram page.

Air Lift reserves the right to make changes and improvements to its products and publications at any time. For the latest version of this manual, contact Air Lift Performance at (800) 248-0892 or visit www.airliftperformance.com.

An Air Lift Performance air management system is highly recommended for this product. Learn more at air-lift.co/productlines.

NOTATION EXPLANATION

Hazard notations appear in various locations in this publication. Information which is highlighted by one of these notations must be observed to help minimize risk of personal injury or possible improper installation which may render the vehicle unsafe. Notes are used to help emphasize areas of procedural importance and provide helpful suggestions. The following definitions explain the use of these notations as they appear throughout this guide.

DANGER — INDICATES IMMEDIATE HAZARDS WHICH WILL RESULT IN SEVERE PERSONAL INJURY OR DEATH.

WARNING — INDICATES HAZARDS OR UNSAFE PRACTICES WHICH COULD RESULT IN SEVERE PERSONAL INJURY OR DEATH.

CAUTION — INDICATES HAZARDS OR UNSAFE PRACTICES WHICH COULD RESULT IN DAMAGE TO THE MACHINE OR MINOR PERSONAL INJURY.

NOTE — *Indicates a procedure, practice or hint which is important to highlight.*

Important Safety Notices

WARNING — DO NOT INFLATE AIR SPRINGS WHILE OFF OF THE VEHICLE. DAMAGE TO ASSEMBLY MAY RESULT AND VOID WARRANTY.

CAUTION — DO NOT WELD TO OR MODIFY PERFORMANCE STRUTS/SHOCKS IN ANY WAY. DAMAGE TO UNIT MAY OCCUR AND WILL VOID WARRANTY.

Installation Diagram

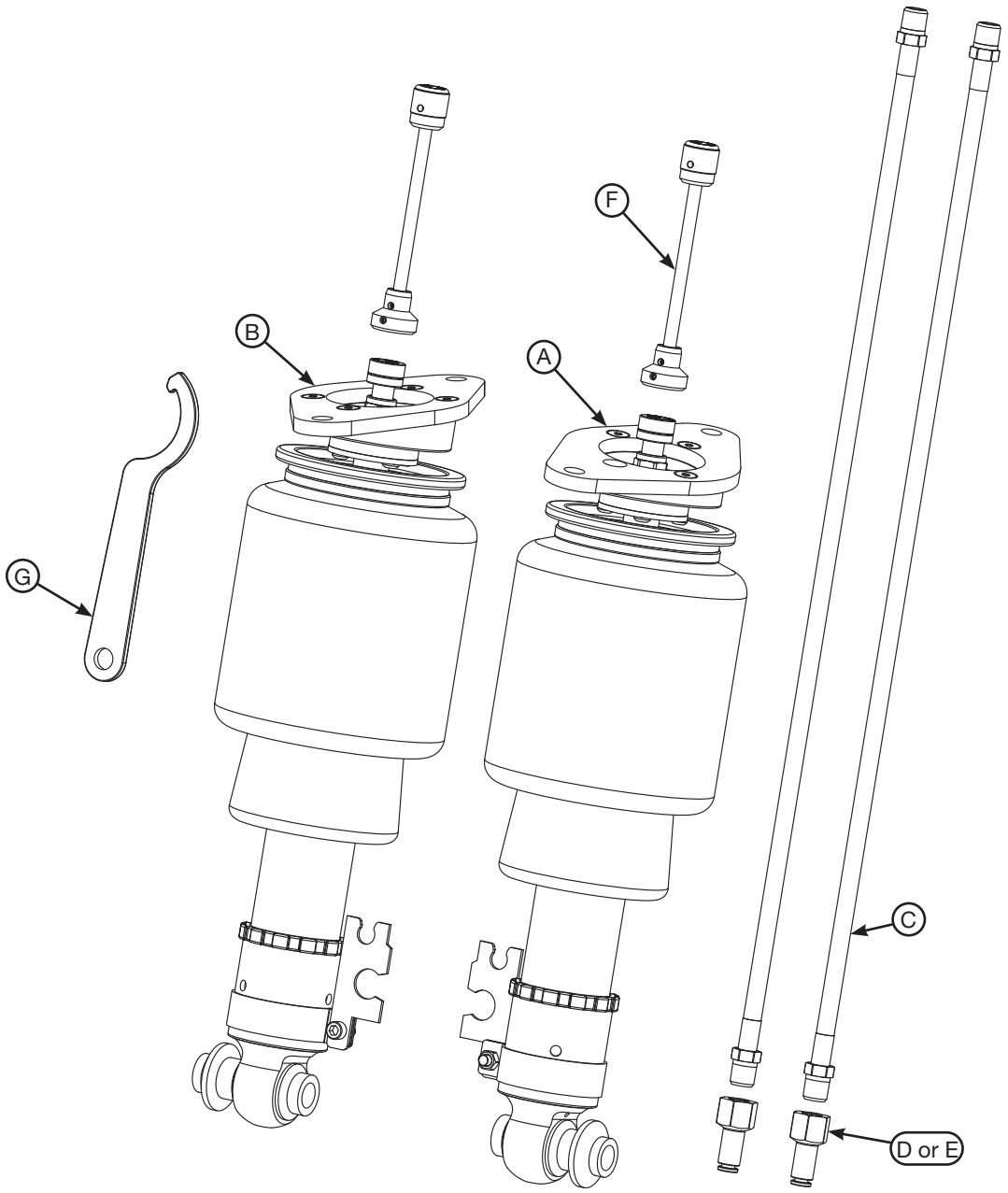

fig. 1

HARDWARE LIST

Item	Part #	Description	Qty
A	35402	Mini Cooper left rear shock	1
B	35403	Mini Cooper right rear shock	1
C	20997	Leader hose, 1/4" ID	2
D	21810	Union, 1/4"FNPT X 1/4" PTC, DOT	2
E	21987	Union, 1/4"FNPT X 3/8" PTC, DOT	2
F		Flexible adjuster extension	2
G		Spanner wrench	1

STOP! Missing or damaged parts? Call Air Lift customer service at (800) 248-0892 for a replacement part.

Installing the Air Suspension

⚠ CAUTION

THIS KIT COMES WITH SLEEVE-STYLE DAMPERS. UNDERSTANDING HOW AND WHEN TO INFLATE THE AIR BAGS IS CRITICAL. SEE PAGE 13 FOR MORE INFORMATION.

PREPARING THE VEHICLE

1. Elevate and support the vehicle using its approved lifting points. Remove the rear wheel and support the hub assembly (Fig. 2).

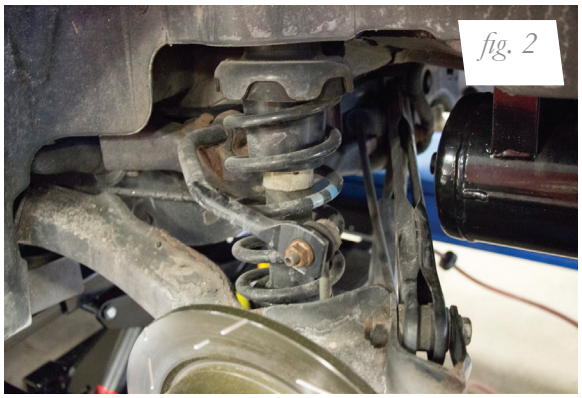
fig. 2

REMOVING THE STOCK SUSPENSION

1. Unclip the sensor wire and brake line from the shock (Fig. 3).

fig. 3

2. Remove the lower shock eye bolt (Fig. 4).

fig. 4

3. Remove the two upper mount bolts and remove the shock assembly from the vehicle (Figs. 5-7).

fig. 5

fig. 6

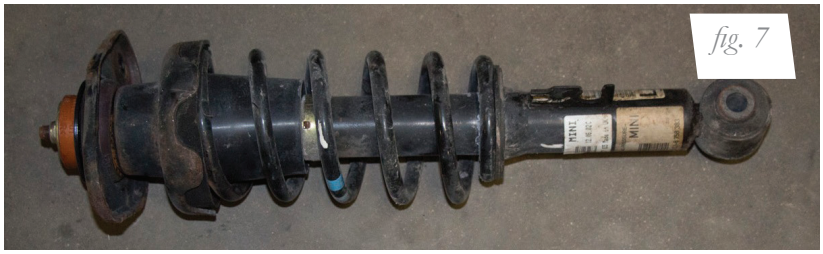
fig. 7

INSTALLING THE DAMPING ADJUSTERS

NOTE *The flexible damping adjuster extension that is included with the kit is optional. If it is not installed, the shock must be removed from the vehicle to adjust the damping.*

1. To add the flexible damping adjuster extension (required in order to adjust damping without removing shocks), place the extension over the adjuster knob and lock in place by tightening the side set screw with a 2mm hex key (Fig. 8).

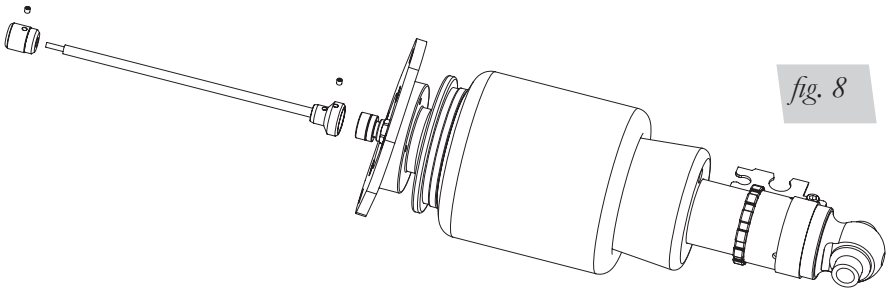
fig. 8

2. If installing the flexible damping adjusters, remove the plastic side walls within the storage compartment and move the electrical wires away from the chassis rail (Figs. 9 & 10). Drill a 5/16” hole toward the front of the vehicle, 1/2” off center from the upper mount pocket (Figs. 11 & 12).

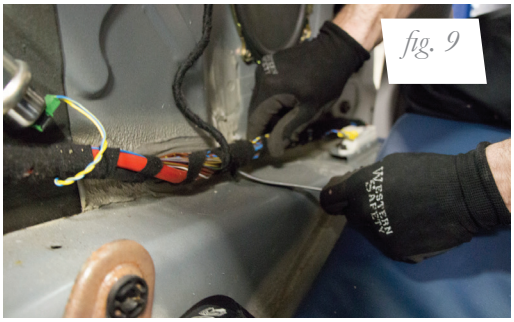
fig. 9

fig. 10

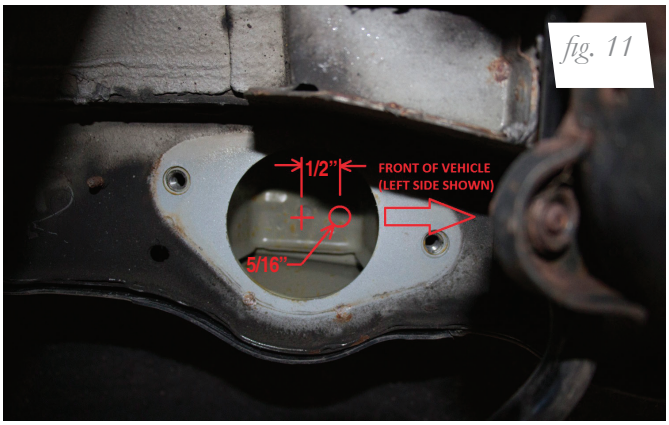

fig. 11

fig. 12

INSTALLING THE KIT COMPONENTS

1. Begin by installing the leader hose into the air spring. Apply thread sealant to the threads of the leader hose. Tighten the appropriate fitting to the air line (1 3/4 turns beyond hand-tight). Tighten the leader hose into the air spring 1 3/4 turns beyond hand-tight (Fig. 13).

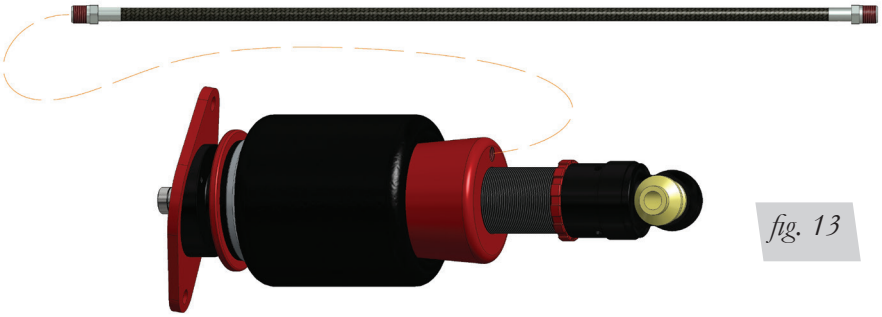
fig. 13

2. Remove the flexible adjuster knob and route flexible adjuster extension through the previously drilled hole. Attach the upper mount bracket to the chassis with the previously removed bolts (Figs. 14-16). Torque to 56 Nm (41 lb.-ft.).

fig. 14

fig. 15

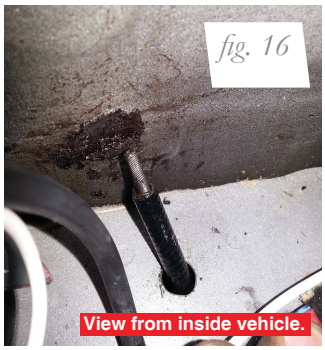

fig. 16

NOTE

The shocks are left and right specific to the upper mounts. Make certain the mounts are installed in the correct orientation as shown in Figure 17.

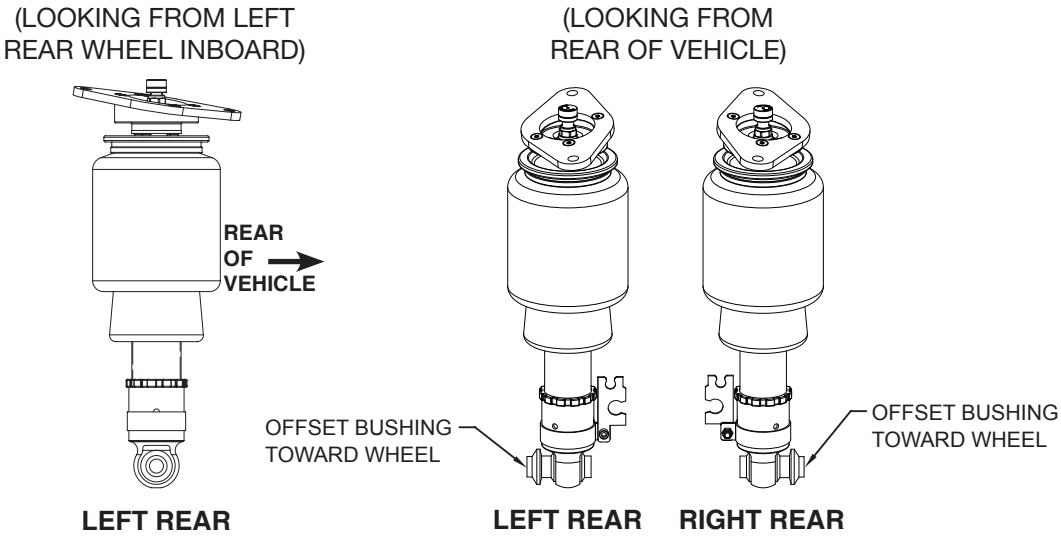

fig. 17

3. Align the lower eye mount with the offset bushing against the mounting surface. Install the lower bolt but do not torque at this time (Torque the lower mount bolt when the vehicle is at ride height.) (Fig. 18).

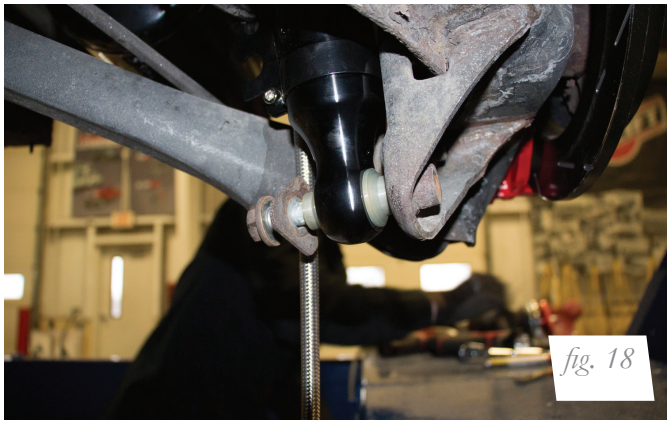
fig. 18

4. Spin the red locking collar against the lower eye mount. Tighten collar 1/4 turn beyond hand tight (Fig. 19).

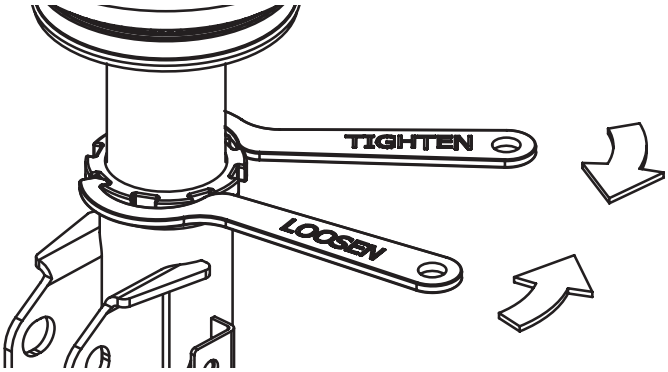

fig. 19

5. Clip the sensor wire and brake line back into the attaching points on the shock (Fig. 20).

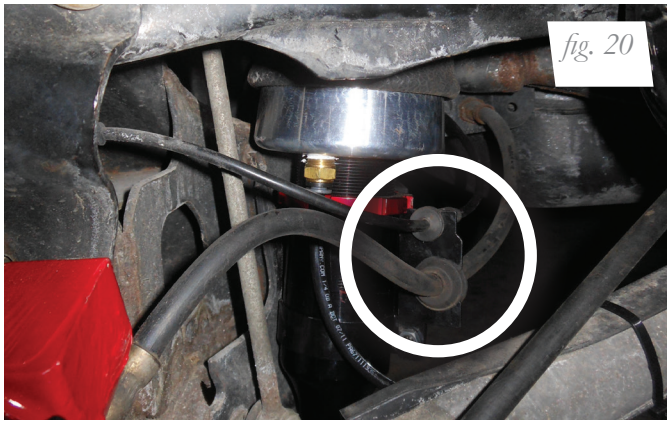

fig. 20

6. Attach the flexible adjuster knob to the adjuster extension and reinstall interior panels (Figs. 21 & 22).

fig. 21

fig. 22

ROUTING THE AIR LINES

1. Fully compress the suspension using a jack. With the suspension compressed, review the best routing for the leader hose that is clear of all suspension components and axle.
2. Routing should also allow for the suspension to extend without kinking or pulling the line tight or rubbing on other components. Following the brake line routing is often a good place to start. Check clearances to all other components.

Before Operating

SETTING THE RIDE HEIGHT

1. With the suspension fully compressed, take a measurement from the fender to a chosen reference point – typically the center of the axle. Record this measurement as max compression (MC).
2. Cycle the suspension to max extension (ME) and record the measurement from the fender to the same reference point.
3. Add ME and MC, then divide the total by 2. Set the suspension to this point. This position will give 50% stroke in either direction and is a starting point for ride height (Fig. 23).

Formula for Calculating Ride Height
(ME+MC)÷2=MID STROKE

fig. 23

4. With the suspension at this position, loosen, then re-torque all suspension bushing pivot joint fasteners to the manufacturer's specifications (Table 1):

Torque Specifications		
Location	Nm	Lb.-ft.
Upper mount to chassis bolts	56	41
Shock eye bolt	165	122
Wheel bolts	140 +/- 10	103 +/- 7
Camber plate bolts	10	7
Locking collar	1/4 turn beyond hand-tight	
Braided air line threads	1 3/4 turns beyond hand-tight	

Table 1

Suggested Driving Air Pressure	Maximum Air Pressure
45-65 PSI	**125 PSI**
FAILURE TO MAINTAIN ADEQUATE MINIMUM PRESSURE (OR PRESSURE PROPORTIONAL TO LOAD) MAY RESULT IN EXCESSIVE BOTTOMING OUT AND **WILL VOID THE WARRANTY**.	

Table 2

CHECK FOR BINDING

1. Inflate and deflate the system (do not exceed 125 PSI) to check for clearance or binding issues. With the air springs deflated, check clearances on everything so as not to pinch brake lines, vent tubes, etc. Clear lines if necessary.
2. Inflate the air springs to 75-90 PSI and check all connections for leaks.

⚠ CAUTION

MAKE SURE THE FRONT WHEELS ARE STRAIGHT WHEN DEFLATING AND REINFLATING AIR BAGS.

DAMPING ADJUSTMENT

Suspension damping is a matter of compromise. Setting it too stiff will make the ride feel jarring. In addition, if the suspension is too stiff, the tires will lose contact with the road, reducing control and power delivery. On the other hand, if the suspension is too soft, the car can experience brake dive and excessive bouncing. The sweet spot lies somewhere in the middle. Air Lift dampers have a range of adjustment, which allows the driver to tune the ride and handling to his or her preferences.

Air Lift recommends damper and air pressure settings for every vehicle kit, but it is impossible to consider every situation. For example, even though Air Lift kits replace the dampers and springs, vehicles with sport-tuned suspensions might have stiffer bushings, larger anti-roll bars, bigger wheels, wider tires, etc. These settings may need to be adjusted to different vehicles and driving characteristics.

1. The dampers in this kit have 30 settings, or “clicks,” of adjustable compression and rebound damping characteristics. Damping is changed through the damper rod using the supplied adjuster (Figs. 24 & 25) or an 3mm hex key (not included).
2. Turn the adjuster clockwise (H) and the damping settings are hardened, reducing oscillations and body motion. Turn the adjuster counterclockwise (S) and the damping is softened.
3. Each damper in this kit is preset to “-20 clicks.” This means that the damper is adjusted 20 clicks away from full stiff, which starts at 0. Counting up from full stiff is the preferred method of keeping track of, or setting, damping. This setting was developed on a 2007 Mini Cooper S.

fig. 24

fig. 25

ALIGNING THE VEHICLE

1. Set the vehicle to the height at which it will most often be driven.
2. If the ride height is lower than stock, Air Lift Performance recommends loosening all pivot points (bolts, nuts) on any control arm, strut arm or radius rod that contains bushings. Once they have been loosened, re-torque to stock specifications (Table 1).

NOTE

It may be necessary to cycle the suspension to loosen the bushing from its mount. This will help re-orient the bushing at its new position based on the chosen ride height.

3. Get a shop alignment of the vehicle at the new chosen ride height.

ADJUSTING EXTENDED OR DROP HEIGHT USING LOWER MOUNT

These dampers have been pre-set at the factory to provide maximum drop height while maintaining adequate tire clearance to the air spring. If you wish to gain more extended height (lift), which is the same as reducing drop height, or want to lower the chassis further and there is still adjustment available at the lower mount, please use the following procedure:

1. Support the vehicle with jack stands or a hoist at approved lifting points.
2. Remove the wheel.
3. Using the supplied spanner wrench, loosen the locking collar (Fig. 26).

The dampers in this kit may look different, but they all allow adjustment of the locking collar with the included spanner wrench.

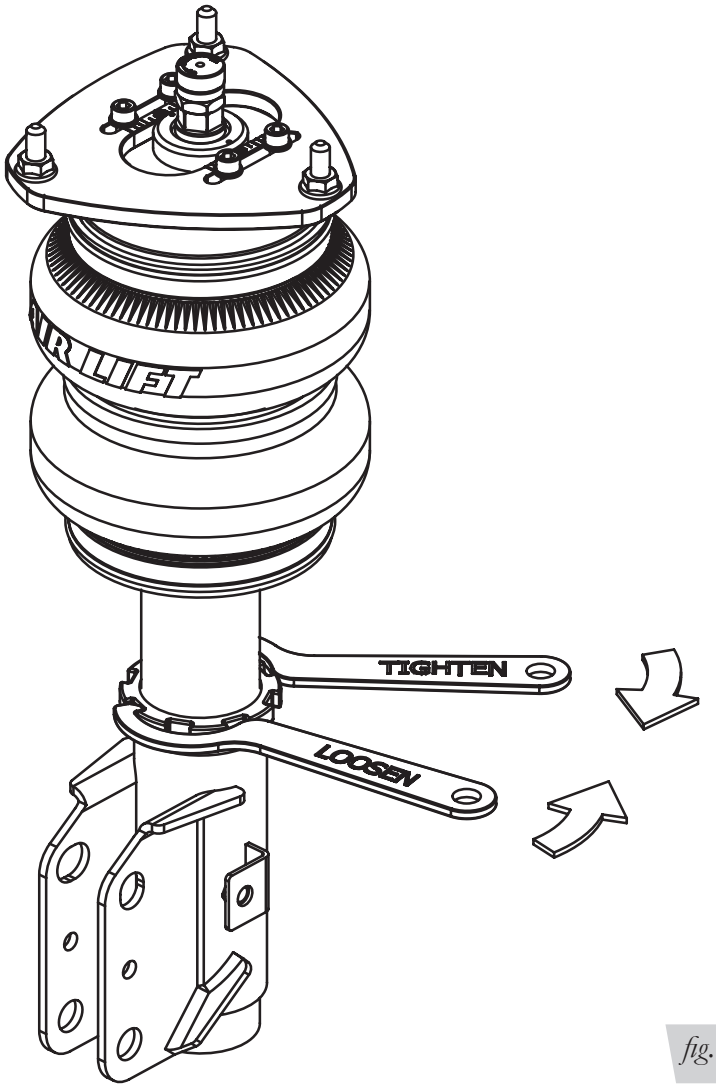

fig. 26

4. Deflate the air spring to 0 PSI on the corner you are adjusting.
5. Disconnect lower mount from suspension.
6. Spin the lower mount to the desired location.

NOTE *Not all vehicles will have further drop height available.*

7. Re-install lower mount to suspension and torque fasteners.
8. Tighten the lower locking collar to the lower mount using significant force.

⚠ CAUTION

WHEN ADJUSTING HEIGHT UPWARD, MAKE SURE THAT THE DAMPER BODY ENGAGES ALL THE THREADS OF THE LOWER MOUNT (FIG. 27). WHEN ADJUSTING DOWNWARD, MAKE SURE THERE IS ADEQUATE AIR SPRING CLEARANCE TO THE TIRE/WHEEL ASSEMBLY. CLEARANCE MUST BE CHECKED WITH SYSTEM FULLY DEFLATED AS WELL AS FULLY INFLATED TO ENSURE THAT NO RUBBING OCCURS. FAILURE TO MAINTAIN ADEQUATE CLEARANCE CAN RESULT IN AIR SPRING FAILURE AND WILL NOT BE COVERED UNDER WARRANTY.

⚠ CAUTION

DO NOT ADJUST HEIGHT BY SPINNING AIR SPRING ON DAMPER! DOING SO MAY CAUSE AN AIR LEAK AND COMPROMISE THE ASSEMBLY.

FOR STRUTS:

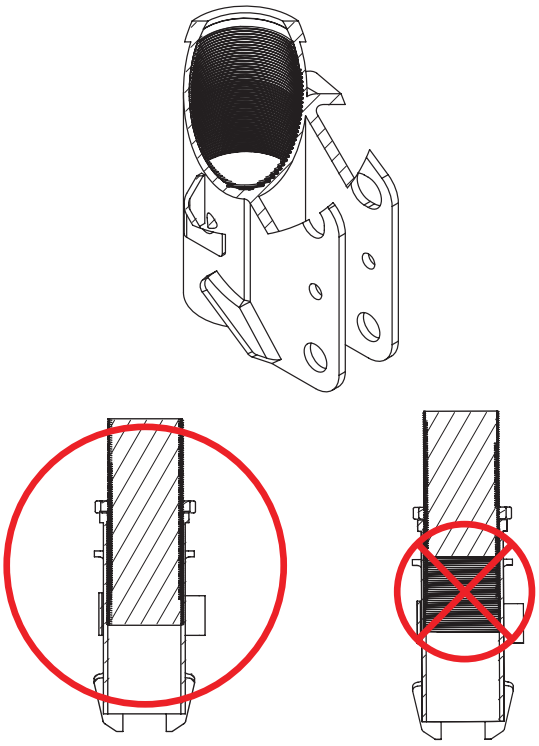

OK, no threads showing.

Not OK, threads are showing.

FOR SHOCKS:

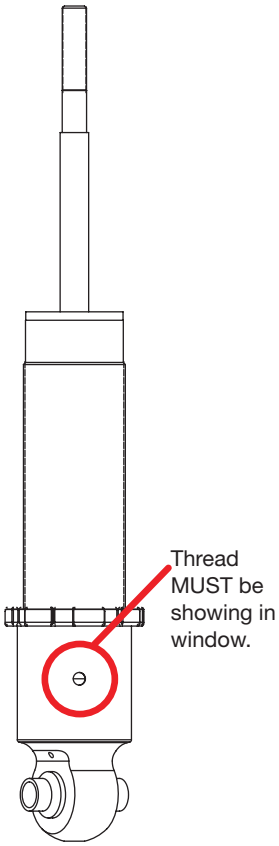

fig. 27

AFTER INITIAL INSTALLATION OF SLEEVE-STYLE DAMPERS

⚠ CAUTION

DO NOT CYCLE THE SUSPENSION WITH THE AIR LINE CONNECTED TO THE LEADER HOSE WITHOUT FIRST ADDING AIR SPRING PRESSURE. DOING SO MAY CAUSE THE AIR SPRING TO IMPROPERLY INFLATE (FIG. 28). IT IS SAFE TO CYCLE THE SUSPENSION TO CHECK FOR CLEARANCES ETC. WITH THE LEADER HOSE OPEN TO ATMOSPHERE (DISCONNECTED FROM AIR LINE).

BEFORE SETTING VEHICLE ON THE GROUND FOR THE FIRST TIME, IT IS VERY IMPORTANT TO INFLATE THE AIR SPRINGS TO AT LEAST 50 PSI. THIS WILL PREVENT ANY POSSIBILITY OF THE AIR SPRING KICKING OUT AND CAUSING A LEAK (FIG. 29).

fig. 28

Caused by cycling with air line attached without pressure. Remove air-line from spring to release vacuum and re-attach. Inflate to more than 50 PSI before lowering car to ground. **Do NOT drive!**

fig. 29

Shows what spring looks like after lowering car to ground with less than 50 PSI and raising it with air pressure. **Do NOT drive!**

fig. 30

Shows what spring looks like when installed correctly.

INSTALLATION CHECKLIST

- ☐ **Clearance** — Inflate the air springs to 75-90 PSI and make sure there is at least 1/2" clearance from anything that might rub against the air spring. This should be checked with the air spring fully inflated and fully deflated.

- ☐ **Leak** — Inflate the air springs to 75-90 PSI and check all connections for leaks. All leaks must be eliminated before the vehicle is road tested.

- ☐ **Heat** — Be sure there is sufficient clearance from heat sources, at least 6" for air springs and air lines. If a heat shield was included in the kit, install it. If there is no heat shield, but one is required, call Air Lift customer service at **(800) 248-0892**.

- ☐ **Fastener** — Recheck all bolts for proper torque.

- ☐ **Road** — Inflate the springs to recommended driving pressures. Drive the vehicle 10 miles and recheck for clearance, loose fasteners and air leaks.

- ☐ **Operating instructions** — If professionally installed, the installer should review the operating instructions with the owner. Be sure to provide the owner with all paperwork that came with the kit.

POST-INSTALLATION CHECKLIST

- ☐ **Overnight leak down test** — Recheck air pressure 24 hours after installation and driving of the vehicle. If the pressure has dropped more than 5 PSI, there is a leak that must be fixed.

- ☐ **Air pressure requirements** — It is important to understand the air pressure requirements of the air spring system. Regardless of load, the air pressure should always be adjusted to maintain adequate ride height at all times while driving.

- ☐ **Thirty-day or 500-mile test** —Recheck the air spring system after 30 days or 500 miles, whichever comes first. If any part shows signs of rubbing or abrasion, the source should be identified and moved, if possible. If it is not possible to relocate the cause of the abrasion, the air spring may need to be remounted. If professionally installed, the installer should be consulted. Check all fasteners for tightness.

Use, Maintenance and Servicing

1. An Air Lift air management system is strongly recommended for this product, but it is possible to operate without one. The air lines can be routed to Schrader valves for use with a separate air compressor. Air lines and Schrader valves are not included with Air Lift Performance kits and would need to be purchased separately. To learn more about Air Lift management systems visit **air-lift.co/productlines**.
2. Check the air pressure before driving.

⚠ WARNING

BEFORE SERVICING THE VEHICLE, MAKE SURE TO TURN OFF “RISE ON START” AND “PRESET MAINTAIN.” THIS WILL ELIMINATE ANY UNINTENDED SUSPENSION CYCLING IF YOU NEED TO TURN THE KEY ON IN THE VEHICLE FOR ANY REASON.

TUNING THE AIR PRESSURE.

Pressure determination comes down to three things — level vehicle, ride comfort and stability.

1. **Level vehicle**

   Depending on load, it is possible one side will need more pressure than the other to level the vehicle.

2. **Ride comfort**

   If the vehicle has a harsh ride, it may be due to either too much pressure or not enough causing frequent bottoming. Also, riding the vehicle at the top, or close to the top of the available stroke will cause an uncomfortable ride due to a lack of rebound travel. This situation should be avoided for driving any significant distance. Try different pressures to determine the best ride comfort. See the Air Lift suggested driving air pressure for this vehicle (Table 2).

3. **Stability**

   Stability translates into safety and should be the priority, meaning the driver may need to sacrifice a perfectly level and comfortable ride. Stability issues include roll control, bounce, dive during braking and sponginess. Tuning out these problems usually requires additional air pressure, damping or both.

Troubleshooting Guide

PROBLEM	CAUSE	SOLUTION
Air spring won't maintain pressure.	Leak at fitting, air line not cut properly or damage to air line during installation.	Find location of leak by spraying listed components with soapy water solution and look for bubbles. Tighten air fitting, re-cut air line or replace damaged components.
	Leak at lower O-ring on damper if air spring is over the damper.	Spray bottom of air spring with soapy water solution and look for bubbles. Contact Air Lift customer service at **(800) 248-0892** to determine if component should be replaced.
Knocking noise when hitting bumps.	Loose suspension component such as locking collar on damper.	Tighten lower locking collar with significant force, check and tighten suspension components to factory specs at desired ride height.
	Driving vehicle too close to maximum extension.	Check current ride height and compare to maximum height. If there is less than 1" (25mm) difference, reduce air pressure to lower ride height.
		Lengthen strut or shock to increase available up travel.
Suspension bottoms out.	Air pressure is too low, causing air springs to bottom out.	Raise air pressure.
The ride is too bouncy.	Air pressure is too high, causing air springs to be too stiff.	Lower air pressure and adjust damper length if necessary to achieve proper ride height.
	Damping is inadequate.	Increase damping with adjusters.
The ride is too soft or floaty.	Damping is inadequate.	
The ride is too harsh.	Excessive damping.	Reduce damping with adjusters.

TIPS FOR INSTALLING AIR LINES

When cutting air lines, use a sharp knife or a hose cutter and make clean, square cuts (Fig. 31). Do not use scissors or wire cutters because these tools will deform the air line, causing it to leak around fittings. Do not cut the lines at an angle.

Do not bend the 1/4" hose at a radius of less than 1" and do not put side load pressure on fitting. The hose should be straight beyond the fitting for 1" before bending.

Inspect hose for scratches that run lengthwise on hose prior to installation. Contact Air Lift customer service at **(800) 248-0892** if the air line is damaged.

To watch a video demonstrating proper air line cutting, go to air-lift.co/cuttingairline

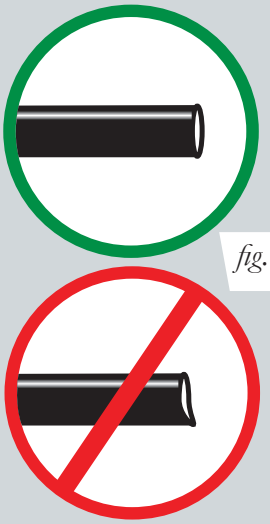

fig. 31

CHECKING FOR LEAKS

1. Inflate the air spring to at least 80 PSI.
2. Spray all connections with a solution of 1/5 liquid dish soap and 4/5 water. Spot leaks easily by looking for bubbles in the soapy water.
3. Check the air pressure again after 24 hours. A 2-4 PSI loss after initial installation is normal. Retest for leaks if the loss is more than 5 PSI.

FIXING LEAKS

1. **Air line to PTC fitting**: Try pushing the air line firmly into the fitting to ensure it is properly seated. If leak persists, deflate the spring and remove the air line by pushing the collar toward the fitting body and pulling firmly on the air line. Trim 1" off the end of the air line making sure the cut is clean and square. Reinsert air line firmly into fitting and pull back on the air line to make sure it is seated.
2. **Threaded connection**: If possible, tighten the fitting another half turn. If the leak persists, deflate spring, remove fitting and re-coat threads with thread sealant. Reinstall to hand tight and then use wrench to finish tightening an additional 1 3/4 turns.
3. **Air spring O-ring seal**: If a leak is found at the upper or lower air spring seal on a strut or shock, contact Air Lift customer service at **(800) 248-0892.**

Notes

Notes

Limited Warranty and Return Policy

WHAT THIS WARRANTY COVERS

Air Lift Company warrants to the original purchaser for a period of one year from the date of original purchase that the Air Lift Performance damper kits will be free from defects in workmanship and materials for the normal expected life of the part when used on cars and trucks as specified by Air Lift Company and under normal operating conditions, subject to the requirements and exclusions set forth below.

WHAT THIS WARRANTY DOES NOT COVER

The warranty does not apply to products that have been improperly applied, improperly installed, or which have not been maintained in accordance with installation instructions furnished with all products. This warranty does not apply and is void if damage or failure is caused by: accident, abuse, misuse (including but not limited to racing or off-road activities or commercial use), abnormal use, faulty installation, liquid contact, fire, earthquake or other external cause; operating the product outside Air Lift Company's instructions, specifications or guidelines; or service, alteration, maintenance or repairs performed by anyone other than Air Lift Company to the product from its purchased condition. This warranty also does not apply to: Universal Air (Fabricator Kits), consumable parts, such as batteries; cosmetic damage, including but not limited to scratches or dents; defects caused by normal wear and tear or otherwise due to the normal aging of the product, or if any serial or identification number has been removed or defaced from the product. Air Lift Company reserves the right to change the design of any product without assuming any obligation to modify any product previously manufactured.

LIMITATION OF LIABILITY

To the extent permitted by law, this warranty and the remedies set forth herein are exclusive and in lieu of all other warranties, remedies and conditions, whether oral, written, statutory, express or implied. AIR LIFT COMPANY DISCLAIMS ALL STATUTORY AND IMPLIED WARRANTIES, INCLUDING WITHOUT LIMITATION, WARRANTIES OF MERCHANTABILITY AND FITNESS FOR A PARTICULAR PURPOSE AND WARRANTIES AGAINST HIDDEN OR LATENT DEFECTS TO THE EXTENT PERMITTED BY LAW. To the extent such warranties cannot be disclaimed, such implied warranties shall apply only for the warranty period specified above. Please note that some states do not allow limitation on how long an implied warranty (or condition) lasts. So the above limitation may not apply to you.

Except as provided in this warranty and to the extent permitted by law, Air Lift Company shall not be liable for any direct, special, incidental or consequential damages resulting from any breach of warranty or condition, or arising in connection with the sale, use or repair of air lift products, or under any other legal theory, including but not limited to loss of use, loss of revenue, loss of actual or anticipated profits, loss of the use of money, loss of business, loss of opportunity, loss of goodwill, and loss of reputation. Air Lift Company's maximum liability shall not in any case exceed the purchase price paid by you for the Air Lift product. Please note that some states do not allow the exclusion or limitation of incidental or consequential damages, so the above limitation or exclusion may not apply to you.

HOW TO GET SERVICE

If a defect in workmanship or materials causes your Air Lift Performance product to become inoperable within the warranty period, before returning any defective product, call Air Lift Company at (800) 248-0892 in the U.S. and Canada (elsewhere, (517) 322-2144) to obtain a Returned Materials Authorization (RMA) number. The consumer shall be responsible for removing (labor charges) the defective product from the vehicle and returning it, shipping costs prepaid, to Air Lift Company for verification. Returns to Air Lift Company must be postage prepaid and sent to: Air Lift Company • 2727 Snow Road • Lansing, MI • 48917. You must prove to the satisfaction of Air Lift Company the date of original purchase of your Air Lift Performance product. You must also enclose the RMA number and a return address. A minimum $10 shipping and handling charge will apply to all warranty claims. You must also pack the product to minimize the risk of it being damaged in transit. If we receive a product in damaged condition as the result of shipping, we will notify you and you must seek a claim with the shipper.

WHAT AIR LIFT COMPANY WILL DO

If you submit a valid claim to Air Lift Company during the warranty period, Air Lift Company will, at its option, repair your Air Lift Performance product or furnish you with a new or rebuilt product. Air Lift Company will not reimburse you for repairs or replacement parts provided by other parties. Your repaired or replacement Air Lift Performance product will be returned to you (subject to payment of the required warranty claim shipping and handling charge) and it will be covered under the warranty for the balance of the warranty period, if any. When a product or part is replaced, any replacement item becomes your property and the replaced item becomes property of Air Lift Company. You are responsible for installation/reinstallation (labor charges) of the product.

HOW THE LAW RELATES TO THIS WARRANTY

This warranty gives you specific legal rights and you may also have other rights which vary from state to state. By this warranty, Air Lift Company does not limit or exclude your rights except as allowed by law. To fully understand your rights, you should consult the laws of your state.

Replacement Part Information

If replacement parts are needed, contact the local dealer or call Air Lift customer service at **(800) 248-0892**. Most parts are immediately available and can be shipped the same day.

Contact Air Lift Company customer service at (800) 248-0892 first if:

- Parts are missing from the kit.
- Need technical assistance on installation or operation.
- Broken or defective parts in the kit.
- Wrong parts in the kit.
- Have a warranty claim or question.

Contact the retailer where the kit was purchased:

- If it is necessary to return or exchange the kit for any reason.
- If there is a problem with shipping if shipped from the retailer.
- If there is a problem with the price.

Contact Information

Mailing address	P.O. Box 80167 Lansing, MI 48908-0167
Shipping address for returns	2727 Snow Road Lansing, MI 48917
Phone	Toll free: (800) 248-0892 International: (517) 322-2144
Email	service@airliftcompany.com
Web address	www.airliftcompany.com

Need Help?

Contact Air Lift Company customer service department by calling (800) 248-0892. For calls from outside the USA or Canada, dial (517) 322-2144.

Connect by searching for **Air Lift Performance** *#LifeonAir*

Thank you for purchasing Air Lift Performance products!

Air Lift Performance • 2727 Snow Road • Lansing, MI 48917 or P.O. Box 80167 • Lansing, MI 48908-0167
Toll Free (800) 248-0892 • Local (517) 322-2144 • Fax (517) 322-0240 • www.airliftperformance.com

Printed in the USA
BGL-0716