Kit 75576

Volkswagen
MKV & MKVI Platform

Front Application

(for vehicles with 55mm lower strut diameter)

INSTALLATION GUIDE

For maximum effectiveness and safety, please read these instructions completely before proceeding with installation.

Failure to read these instructions can result in an incorrect installation.

MN-868 • (031603) • ECR 8222

TABLE OF CONTENTS

Introduction 2

Notation Explanation 2

Important Safety Notices 2

Installation Diagram 3

Tools List 3

Hardware List 3

Installing the Air Suspension 4

Preparing the Vehicle 4

Removing the Strut 4

Installing the New Strut Assembly 6

Aligning the Vehicle 7

Damping Adjustment 7

Adjusting Extended or Drop Height Using Lower Mount 8

Before Operating 10

Installation Checklist 10

Product Use, Maintenance and Servicing 11

Suggested Driving and Maximum Air Pressures 11

Maintenance Guidelines 11

Troubleshooting Guide 11

Frequently Asked Questions 11

Tuning the Air Pressure 12

Checking for Leaks 12

Fixing Leaks 12

Limited Warranty & Return Policy 16

Replacement Information 17

Contact Information 17

Introduction

The purpose of this publication is to assist with the installation, maintenance and troubleshooting of this Volkswagen MKV & MKVI Performance kit.

It is important to read and understand the entire installation guide before beginning installation or performing any maintenance, service or repair. The information includes a hardware list, tool list, step-by-step installation information, maintenance tips, safety information and a troubleshooting guide.

Air Lift Company reserves the right to make changes and improvements to its products and publications at any time. For the latest version of this manual, contact Air Lift Company at (800) 248-0892 or visit our website at www.airliftcompany.com.

NOTATION EXPLANATION

Hazard notations appear in various locations in this publication. Information which is highlighted by one of these notations must be observed to help minimize risk of personal injury or possible improper installation which may render the vehicle unsafe. Notes are used to help emphasize areas of procedural importance and provide helpful suggestions. The following definitions explain the use of these notations as they appear throughout this guide.

⚠ DANGER INDICATES IMMEDIATE HAZARDS WHICH WILL RESULT IN SEVERE PERSONAL INJURY OR DEATH.

⚠ WARNING INDICATES HAZARDS OR UNSAFE PRACTICES WHICH COULD RESULT IN SEVERE PERSONAL INJURY OR DEATH.

⚠ CAUTION INDICATES HAZARDS OR UNSAFE PRACTICES WHICH COULD RESULT IN DAMAGE TO THE MACHINE OR MINOR PERSONAL INJURY.

NOTE *Indicates a procedure, practice or hint which is important to highlight.*

IMPORTANT SAFETY NOTICES

The installation of this kit does not alter the Gross Vehicle Weight Rating (GVWR) or payload of the vehicle. Check your vehicle's owner's manual and do not exceed the maximum load listed for your vehicle.

Gross Vehicle Weight Rating: The maximum allowable weight of the fully loaded vehicle (including passengers and cargo). This number — along with other weight limits, as well as tire, rim size and inflation pressure data — is shown on the vehicle's Safety Compliance Certification Label.

Payload: The combined, maximum allowable weight of cargo and passengers that the vehicle is designed to carry. Payload is GVWR minus the Base Curb Weight.

⚠ WARNING DO NOT INFLATE AIR SPRINGS WHILE OFF OF THE VEHICLE. DAMAGE TO ASSEMBLY MAY RESULT AND VOID WARRANTY.

⚠ CAUTION DO NOT WELD TO, OR MODIFY PERFORMANCE STRUTS/SHOCKS IN ANY WAY. DAMAGE TO UNIT MAY OCCUR AND WILL VOID WARRANTY.

Installation Diagram

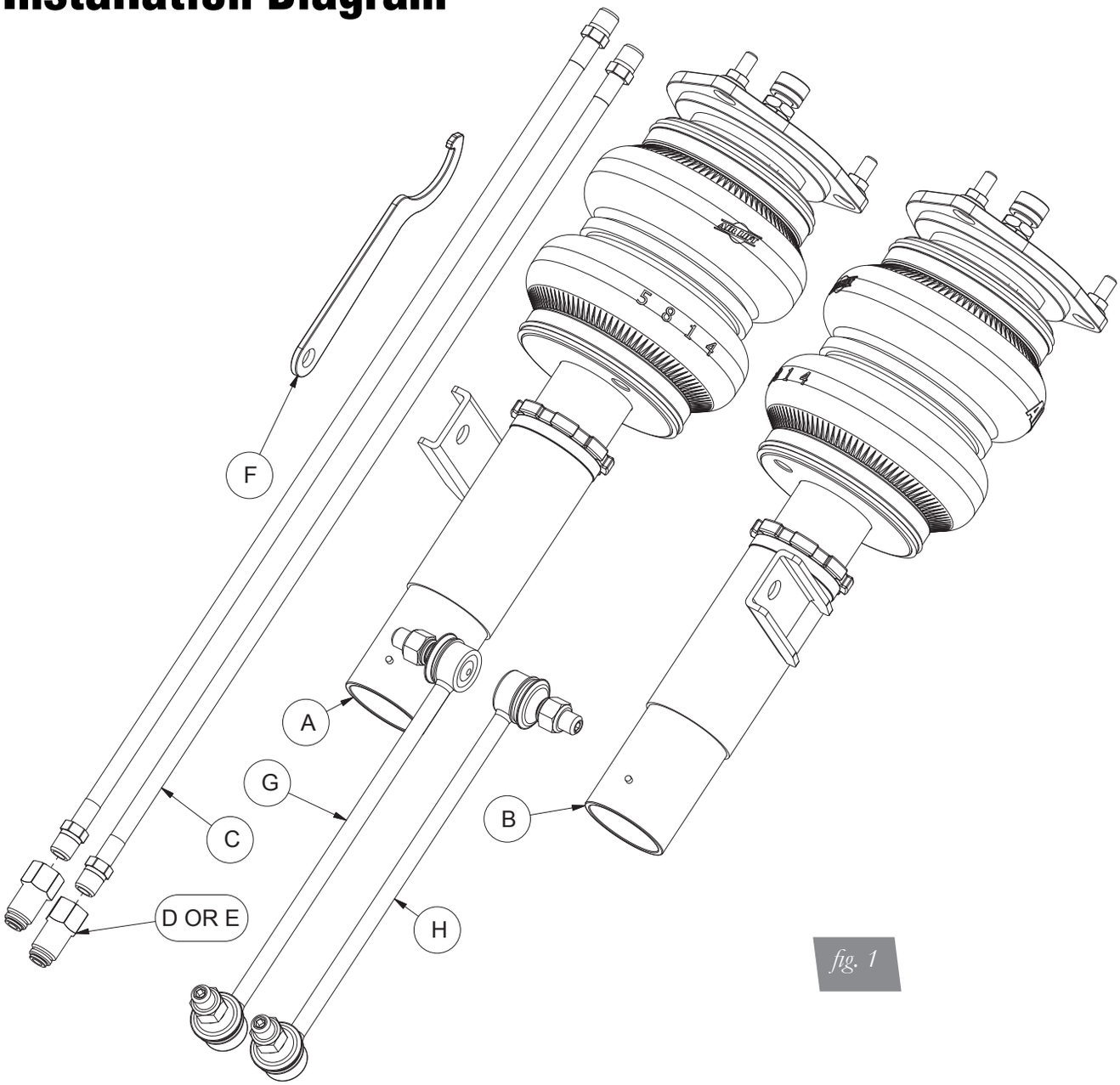

fig. 1

TOOLS LIST

Description
Jack
Jack stands or hoist
Torque wrench
Metric Wrenches
Standard Wrenches
VW Spreader 3424

HARDWARE LIST

Item	Part #	Description	Qty
A	35234	Strut assembly, MKV/VI Front (55mm) R	1
B	35235	Strut assembly, MKV/VI Front (55mm) L	1
C	20997	Leader Hose, 1/4” ID	2
D	21987	Union, 1/4”FNPT X 3/8” PTC, DOT	2
E	21810	Union, 1/4”FNPT X 1/4” PTC, DOT	2
F		Collar Wrench	1
G		End Link - 260mm RIGHT	1
H		End Link - 260mm LEFT	1

STOP! Missing or damaged parts? Call Air Lift customer service at (800) 248-0892 for a replacement part.

Installing the Air Suspension

DANGER

This application is designed for previously modified vehicles where the frame has been notched for axle clearance. Air Lift Company does not recommend frame modification and any modifications previously done are at the owner's risk. Air Lift Company is not liable for vehicle or personal damage due to modifications performed.

PREPARING THE VEHICLE

1. Elevate the vehicle and support the body with a hoist or jack stands.
2. Remove the front wheels.

NOTE

If the vehicle is equipped with Automatic Headlight Vertical Aim Control, detach the unit from the lower control arm (Fig. 2 - part 1) to prevent overextension.

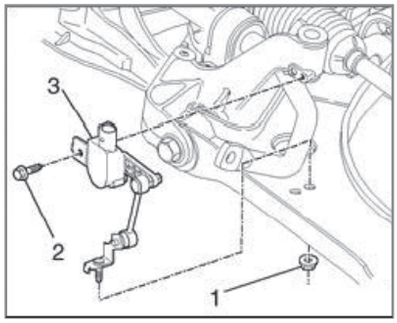

fig. 2

REMOVING THE STRUT

1. Unbolt the sway bar from the tab (Fig. 3). For sway bar removal instructions see factory repair manual.
2. Unthread and remove the axle bolt from the hub assembly (Fig. 3a).

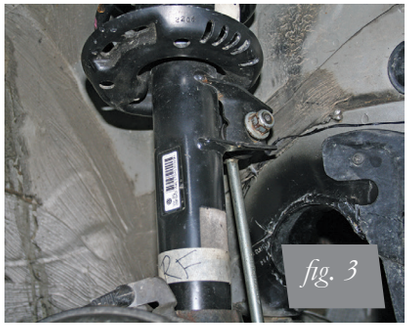

fig. 3

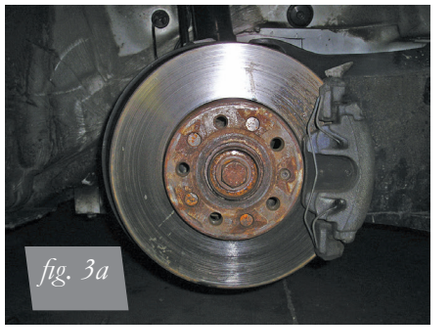

fig. 3a

3. Remove the three lower nuts from the lower ball joint and control arm (Fig. 4). Detach the ball joint and hub assembly from the control arm.

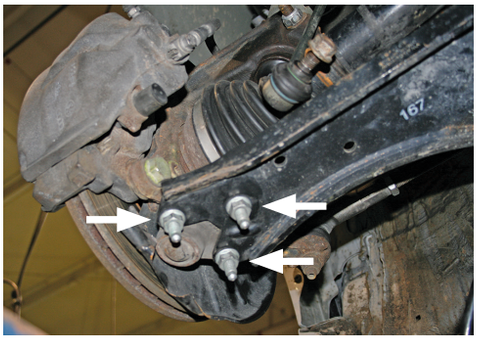

fig. 4

4. Pull drive axle out of the hub assembly and secure the axle to the body with wire.

⚠ CAUTION

TO PREVENT DAMAGE TO THE INNER AXLE JOINT, DO NOT ALLOW THE AXLE TO HANG FREE.

5. Reattach the lower ball joint to the lower control arm.
6. Support the hub assembly.
7. Remove the bolt at the back of the hub assembly to the strut.
8. Spread the hub assembly slot and push down on the hub to release the strut from its lower mount (Fig. 5). Volkswagen specific tool is spreader 3424.

fig. 5

9. Pull weather-stripping away from the plenum chamber cover within the engine bay and pull the cover up. Removing the wiper arms and completely removing the cover will gain more access.
10. Remove the three bolts from the upper strut mount (Fig. 6) and remove the strut assembly from the vehicle.

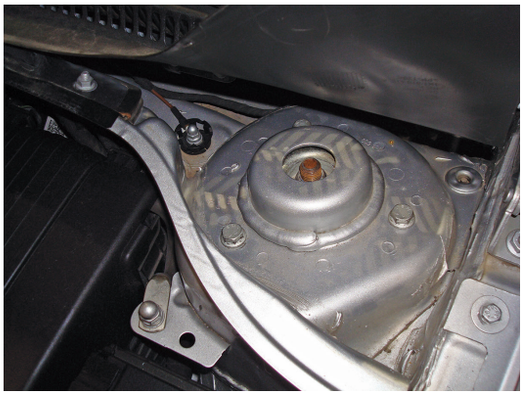

fig. 6

INSTALLING THE NEW STRUT ASSEMBLY

1. Prior to installing the strut, attach the braided line provided to the threaded port at the bottom of the air spring (Fig. 7). Seal with Teflon tape or thread sealant. Seal and thread supplied fitting to the end of braided hose.

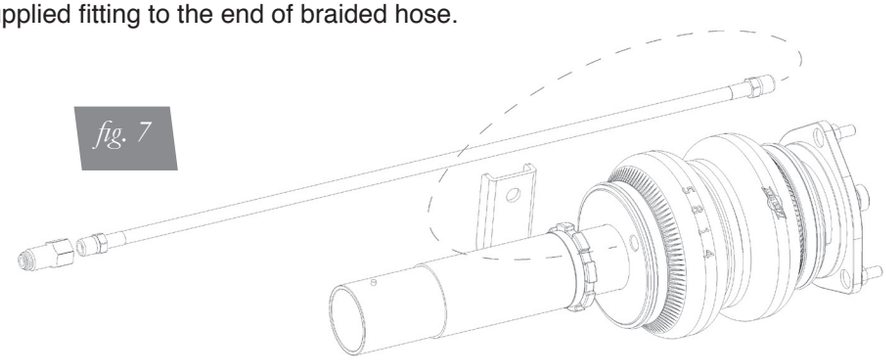

fig. 7

2. Insert strut into the hub assembly. Reinstall the lower mounting bolt and torque to 70 Nm (52 lb.-ft.).
3. Lift assembly into strut pocket and align upper mounting bolts with three holes. Using the supplied nuts and washers, tighten the upper mount to 37 Nm (27 lb.-ft.).
4. Remove the lower ball joint bolts again and separate the control arm from the joint. Reinsert the axle.
5. Reinstall the ball joint nuts and torque to 60 Nm (44 lb.-ft.).
6. Torque the hex head drive axle to 200 NM (148 lb.-ft.). If the bolt is a 12 point, torque to 70 NM (52 lb.-ft.).
7. Reinstall the plenum chamber cover and wiper arms if previously removed.
8. Fully compress the suspension using a jack. With the suspension compressed, review the best routing for the leader hose that is clear of all suspension components and axle. Routing should also allow for the suspension to extend without kinking or pulling the line tight or rubbing on other components. Following the brake line routing is often a good place to start. Check clearances to all other components.
9. With the suspension fully compressed, take a measurement from the fender to some reference point – typically the center of the axle. Record this measurement as Max Compression.
10. Cycle the suspension to Max Extension and record the measurement from the same reference points.
11. Add ME and MC then divide by 2. Set the suspension to this point. This position will give 50% stroke in either direction and is a starting point for ride height (fig. 8).

Formula for Calculating Ride Height
(ME+MC)÷2=MID STROKE

fig. 8

12. At this position, torque the lower clevis bolt, upper and lower control arm bolts to manufacturer's specifications (Table 1).

13. Reinstall wheels; retake the Max Compression and Extension measurements from the fender to lower wheel lip. Recalculate the ride height at 50% stroke and set the vehicle to that height. Enjoy the new look and handling! Please make sure to get an alignment at the preferred drive height.

Torque Specifications		
Location	Nm	lb-ft
Strut Lower Mount Pinch Bolt	70	52
Strut Upper Mount Nuts	37	27
Ball Joint Nuts	60	44
Hex Head Drive Axle Bolt	200	148
12 Point Drive Axle Bolt	70	52
Wheels	120	89

Table 1

ALIGNING THE VEHICLE

1. Using the control system, set the vehicle height to the new custom ride height.
2. If the custom ride height is lower than stock, we recommend loosening all pivot points (bolts, nuts) on any control arm, strut arm or radius rod that contains bushings. Once they have been loosened, re-torque to stock specifications.

NOTE

It may be necessary to cycle the suspension to loosen the bushing up from its mount. This will help unload the bushing to make it last longer at its new position based on the custom ride height.

DAMPING ADJUSTMENT

The shocks in this kit have 30 settings or "clicks" of adjustable compression and rebound damping characteristics. Damping is changed through the adjuster at the top of the shock rod. Turn the adjuster clockwise and the damping settings are hardened. Turn the adjuster counterclockwise and the damping is softened. Each damper is preset to "-15 clicks". This means that the shock is adjusted 15 clicks away from full stiff. Counting down from full stiff is the preferred method of keeping track/setting of damping. This setting was developed on a 2008 Volkswagen Jetta and may need to be adjusted to different vehicles and driving characteristics.

fig. 9

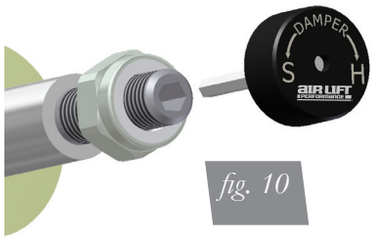

fig. 10

ADJUSTING EXTENDED OR DROP HEIGHT USING LOWER MOUNT

Your dampers have been pre-set at the factory to provide maximum drop height while maintaining adequate tire clearance to the air spring. If you wish to gain more extended height (lift), which is the same as reducing drop height, or want to lower the chassis further and there is still adjustment available at the lower mount, please use the following procedure:

1. Support the vehicle with jack stands or a hoist at approved lifting points.
2. Remove the wheel.
3. Using the supplied spanner wrench, loosen the lower locking collar (Fig. 11).

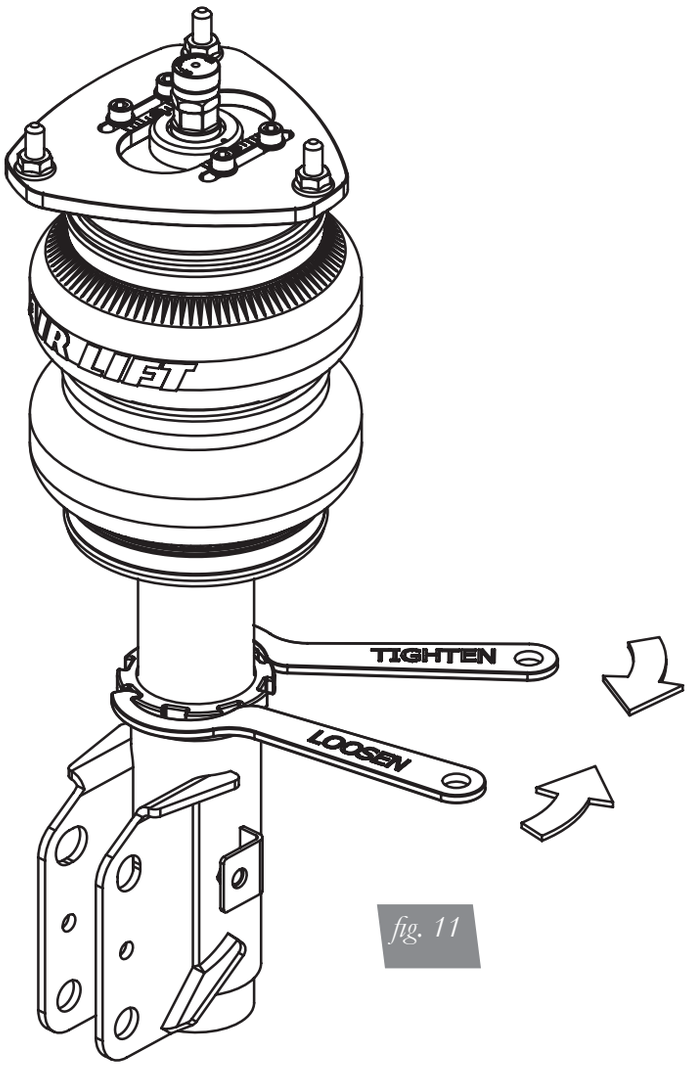

fig. 11

4. Deflate the air spring to 0 PSI on the corner you are adjusting.
5. Disconnect lower mount from suspension.
6. Spin the lower mount to the desired location.

NOTE *Not all models will have further drop height available.*

7. Re-install lower mount to suspension and torque fasteners.
8. Tighten the lower locking collar to the lower mount using significant force.

⚠ CAUTION WHEN ADJUSTING HEIGHT UPWARDS, MAKE SURE THAT THE DAMPER BODY ENGAGES ALL THE THREADS OF THE LOWER MOUNT (FIG. 12). WHEN ADJUSTING DOWNWARDS, MAKE SURE THERE IS ADEQUATE AIR SPRING CLEARANCE TO THE TIRE/WHEEL ASSEMBLY. CLEARANCE MUST BE CHECKED WITH SYSTEM FULLY DEFLATED AS WELL AS FULLY INFLATED TO ENSURE THAT NO RUBBING OCCURS. FAILURE TO MAINTAIN ADEQUATE CLEARANCE CAN RESULT IN AIR SPRING FAILURE AND WILL NOT BE COVERED UNDER WARRANTY.

⚠ CAUTION DO NOT ADJUST HEIGHT BY SPINNING AIR SPRING ON DAMPER! DOING SO MAY CAUSE AN AIR LEAK AND COMPROMISE THE ASSEMBLY.

FOR STRUTS:

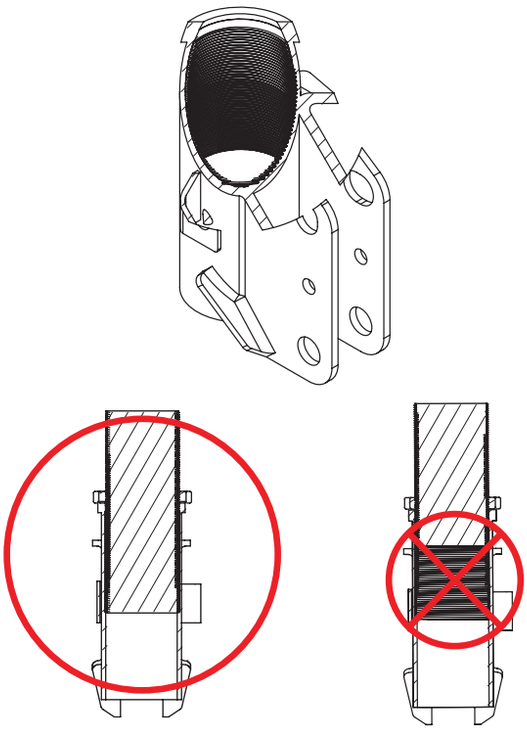

OK, no threads showing.

Not OK, threads are showing.

FOR SHOCKS:

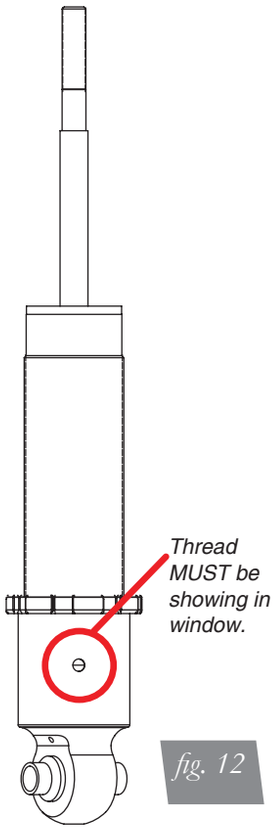

fig. 12

Before Operating

CAUTION MAKE SURE THE FRONT WHEELS ARE STRAIGHT WHEN DEFLATING AND REINFLATING AIR BAGS.

1. Inflate and deflate the system (do not exceed 125 PSI) to check for clearance or binding issues. With the air springs deflated, check clearances on everything so as not to pinch brake lines, vent tubes, etc. Clear lines if necessary.
2. Inflate the air springs to 75-90 PSI and check all connections for leaks.
3. Air Lift part #27669 or #27671, AutoPilot V2 Air Management System, is highly recommended for this product.
4. Please familiarize yourself further with this product by reading the Product Use, Maintenance and Servicing section.

INSTALLATION CHECKLIST

- ❑ Clearance test — Inflate the air springs to 75-90 PSI and make sure there is at least 1/2” clearance from anything that might rub against each air spring. Be sure to check the clearance at ride height and after vehicle alignment.
- ❑ Leak test before road test — Inflate the air springs to 75-90 PSI and check all connections for leaks. All leaks must be eliminated before the vehicle is road tested.
- ❑ Heat test — Be sure there is sufficient clearance from heat sources, at least 6” for air springs and air lines. If a heat shield was included in the kit, install it. If there is no heat shield, but one is required, call Air Lift customer service at (800) 248-0892.
- ❑ Fastener test — Recheck all bolts for proper torque.
- ❑ Road test — The vehicle should be road tested after the preceding tests. Inflate the springs to recommended driving pressures. Drive the vehicle 10 miles and recheck for clearance, loose fasteners and air leaks.
- ❑ Operating instructions — If professionally installed, the installer should review the operating instructions with the owner. Be sure to provide the owner with all of the paperwork that came with the kit.

Technician’s Signature _____

Date_____

POST-INSTALLATION CHECKLIST

- ❑ Overnight leak down test — Recheck air pressure after the vehicle has been used for 24 hours. If the pressure has dropped more than 5 PSI, then there is a leak that must be fixed. Either fix the leak yourself or return to the installer for service.
- ❑ Air pressure requirements — Regardless of load, the air pressure should always be adjusted to maintain adequate ride height at all times while driving.
- ❑ Thirty day or 500 mile test — Recheck the air spring system after 30 days or 500 miles, whichever comes first. If any part shows signs of rubbing or abrasion, it must be remedied immediately! Please consult installation manual and re-check your installation. Rubbing of any kind will cause failure and will not be covered under warranty. If professionally installed, the installer should be consulted. Check all fasteners for tightness.

Product Use, Maintenance and Servicing

Suggested Driving Air Pressure	Maximum Air Pressure
45 PSI	125 PSI
FAILURE TO MAINTAIN ADEQUATE MINIMUM PRESSURE (OR PRESSURE PROPORTIONAL TO LOAD) WILL RESULT IN BOTTOMING OUT, OVER-EXTENSION OR RUBBING AGAINST ANOTHER COMPONENT AND WILL **VOID THE WARRANTY**.	

MAINTENANCE GUIDELINES

NOTE *By following these steps, vehicle owners will obtain the longest life and best results from their air spring.*

1. Check the air pressure before driving.
2. Never inflate beyond 125 PSI.
3. If you develop an air leak in the system, use a soapy water solution to check all air line connections, before deflating and removing the spring.
4. When increasing load, always adjust the air pressure to maintain normal ride height. Increase or decrease pressure from the system as necessary to attain normal ride height for optimal ride and handling. Remember that loads carried behind the axle (including tongue loads) require more leveling force (pressure) than those carried directly over the axle.

⚠ CAUTION FOR YOUR SAFETY AND TO PREVENT DAMAGE TO YOUR VEHICLE, DO NOT EXCEED MAXIMUM GROSS VEHICLE WEIGHT RATING (GVWR), AS INDICATED BY THE VEHICLE MANUFACTURER. ALTHOUGH YOUR AIR SPRINGS ARE RATED AT A MAXIMUM INFLATION PRESSURE OF 125 PSI, THE AIR PRESSURE ACTUALLY NEEDED IS DEPENDENT ON YOUR LOAD.

5. Always add air to the springs in small quantities, checking the pressure frequently. Sleeves require less air volume than a tire and inflate quickly.
6. Should it become necessary to raise the vehicle by the frame, make sure the control system is turned off before lifting.

TROUBLESHOOTING GUIDE

1. Leak test the air line connections, the threaded connection into the air spring, and all fittings in the control system.
2. Inspect the air lines to be sure none are pinched. Tie straps may be too tight. Loosen or replace the strap and replace leaking components.
3. Inspect the air line for holes and cracks. Replace as needed.
4. Look for a kink or fold in the air line. Reroute as needed.

If the preceding steps do not solve the problem, it is possibly caused by a failed air spring — either a factory defect or an operating problem. Please call Air Lift at (800) 248-0892 for assistance.

FREQUENTLY ASKED QUESTIONS

Q. Will installing air springs increase the weight ratings of a vehicle?
No. Adding air springs will not change the weight ratings (GAWR, GCWR and/or GVWR) of a vehicle. Exceeding the GVWR is dangerous and voids the Air Lift warranty.

Q. How long should air springs last?
If the air springs are properly installed and maintained they can last indefinitely.

Q. Will raising the vehicle on a hoist for service work damage the air springs?
No. The vehicle can be lifted on a hoist safely. If equipped with a digital control system, it is recommended that the system be put in “manual mode” before lifting so the system does not try and adjust while on the hoist.

TUNING THE AIR PRESSURE

Pressure determination comes down to three things — level vehicle, ride comfort, and stability.

1. **Level vehicle**

   If the vehicle's headlights are shining into the trees or the vehicle is leaning to one side, then it is not level. Raise the air pressure to correct either of these problems and level the vehicle.

2. **Ride comfort**

   If the vehicle has a rough or harsh ride it may be due to either too much pressure or not enough. Try different pressures to determine the best ride comfort. See Air Lift suggested driving air pressure.

3. **Stability**

   Stability translates into safety and should be the priority, meaning the driver may need to sacrifice a perfectly level and comfortable ride. Stability issues include roll control, bounce, dive during braking and sponginess. Tuning out these problems usually requires additional air pressure, strut damping, or both.

CHECKING FOR LEAKS

1. Inflate the air spring to 80 PSI.
2. Spray all connections and the inflation valves with a solution of 1/5 liquid dish soap and 4/5 water. Spot leaks easily by looking for bubbles in the soapy water.
3. After the test, deflate the springs to the minimum pressure required to restore the system to normal ride height.
4. Check the air pressure again after 24 hours. A 2-4 PSI loss after initial installation is normal. Retest for leaks if the loss is more than 5 PSI.

FIXING LEAKS

1. If there is a problem with a swivel fitting:
   a. Check the air line connection by deflating the spring and removing the line by pulling the collar against the fitting and pulling firmly on the air line. Trim 1" off the end of the air line. Be sure the cut is clean and square (see Fig. 13). Reinsert the air line into the push-to-connect fitting.
   b. Check the threaded connection by tightening the swivel fitting another 1/2 turn. If it still leaks, deflate the air spring, remove the fitting, and re-coat the threads with thread sealant. Reinstall by hand tightening as much as possible and then use a wrench for an additional two turns.
2. If the preceding steps have not resolved the problem, call Air Lift customer service at (800) 248-0892.

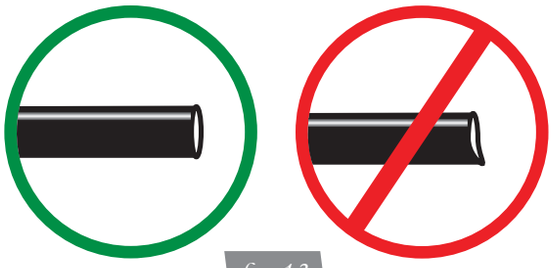

fig. 13

Notes

Notes

Notes

Limited Warranty and Return Policy

WHAT THIS WARRANTY COVERS

Air Lift Company, for all Air Lift Performance products, except its Air Lift Performance 3H™ and 3P™ systems, warrants to the original purchaser for a period of one year from the date of original purchase that the Air Lift Performance damper kits will be free from defects in workmanship and materials for the normal expected life of the part when used on cars and trucks as specified by Air Lift Company and under normal operating conditions, subject to the requirements and exclusions set forth below.

Air Lift Company provides a Limited Lifetime Warranty to the original purchaser of its Air Lift Performance 3H™ and 3P™ Control/Air Management Systems, that the Air Lift Performance products will be free from defects in workmanship and materials for the normal expected life of the part when used on cars and trucks as specified by Air Lift Company and under normal operating conditions, subject to the requirements and exclusions set forth below.

WHAT THIS WARRANTY DOES NOT COVER

The warranty does not apply to products that have been improperly applied, improperly installed, or which have not been maintained in accordance with installation instructions furnished with all products. This warranty does not apply and is void if damage or failure is caused by: accident, abuse, misuse (including but not limited to racing or off-road activities or commercial use), abnormal use, faulty installation, liquid contact, fire, earthquake or other external cause; operating the product outside Air Lift Company's instructions, specifications or guidelines; or service, alteration, maintenance or repairs performed by anyone other than Air Lift Company to the product from its purchased condition. This warranty also does not apply to: Universal Air (Fabricator Kits), consumable parts, such as batteries; cosmetic damage, including but not limited to scratches or dents; defects caused by normal wear and tear or otherwise due to the normal aging of the product, or if any serial or identification number has been removed or defaced from the product. Air Lift Company reserves the right to change the design of any product without assuming any obligation to modify any product previously manufactured.

LIMITATION OF LIABILITY

To the extent permitted by law, this warranty and the remedies set forth herein are exclusive and in lieu of all other warranties, remedies and conditions, whether oral, written, statutory, express or implied. AIR LIFT COMPANY DISCLAIMS ALL STATUTORY AND IMPLIED WARRANTIES, INCLUDING WITHOUT LIMITATION, WARRANTIES OF MERCHANTABILITY AND FITNESS FOR A PARTICULAR PURPOSE AND WARRANTIES AGAINST HIDDEN OR LATENT DEFECTS TO THE EXTENT PERMITTED BY LAW. To the extent such warranties cannot be disclaimed, such implied warranties shall apply only for the warranty period specified above. Please note that some states do not allow limitation on how long an implied warranty (or condition) lasts. So the above limitation may not apply to you.

Except as provided in this warranty and to the extent permitted by law, Air Lift Company shall not be liable for any direct, special, incidental or consequential damages resulting from any breach of warranty or condition, or arising in connection with the sale, use or repair of air lift products, or under any other legal theory, including but not limited to loss of use, loss of revenue, loss of actual or anticipated profits, loss of the use of money, loss of business, loss of opportunity, loss of goodwill, and loss of reputation. Air Lift Company's maximum liability shall not in any case exceed the purchase price paid by you for the Air Lift product. Please note that some states do not allow the exclusion or limitation of incidental or consequential damages, so the above limitation or exclusion may not apply to you.

HOW TO GET SERVICE

If a defect in workmanship or materials causes your Air Lift Performance product to become inoperable within the warranty period, before returning any defective product, call Air Lift Company at (800) 248-0892 in the U.S. and Canada (elsewhere, (517) 322-2144) to obtain a Returned Materials Authorization (RMA) number. The consumer shall be responsible for removing (labor charges) the defective product from the vehicle and returning it, shipping costs prepaid, to Air Lift Company for verification. Returns to Air Lift Company must be postage prepaid and sent to: Air Lift Company • 2727 Snow Road • Lansing, MI • 48917. You must prove to the satisfaction of Air Lift Company the date of original purchase of your Air Lift Performance product. You must also enclose the RMA number and a return address. A minimum $10 shipping and handling charge will apply to all warranty claims. You must also pack the product to minimize the risk of it being damaged in transit. If we receive a product in damaged condition as the result of shipping, we will notify you and you must seek a claim with the shipper.

WHAT AIR LIFT COMPANY WILL DO

If you submit a valid claim to Air Lift Company during the warranty period, Air Lift Company will, at its option, repair your Air Lift Performance product or furnish you with a new or rebuilt product. Air Lift Company will not reimburse you for repairs or replacement parts provided by other parties. Your repaired or replacement Air Lift Performance product will be returned to you (subject to payment of the required warranty claim shipping and handling charge) and it will be covered under the warranty for the balance of the warranty period, if any. When a product or part is replaced, any replacement item becomes your property and the replaced item becomes property of Air Lift Company. You are responsible for installation/reinstallation (labor charges) of the product.

HOW THE LAW RELATES TO THIS WARRANTY

This warranty gives you specific legal rights and you may also have other rights which vary from state to state. By this warranty, Air Lift Company does not limit or exclude your rights except as allowed by law. To fully understand your rights, you should consult the laws of your state.

Replacement Part Information

If replacement parts are needed, contact the local dealer or call Air Lift customer service at **(800) 248-0892**. Most parts are immediately available and can be shipped the same day.

Contact Air Lift Company customer service at (800) 248-0892 first if:

- Parts are missing from the kit.
- Need technical assistance on installation or operation.
- Broken or defective parts in the kit.
- Wrong parts in the kit.
- Have a warranty claim or question.

Contact the retailer where the kit was purchased:

- If it is necessary to return or exchange the kit for any reason.
- If there is a problem with shipping if shipped from the retailer.
- If there is a problem with the price.

Contact Information

Mailing address	P.O. Box 80167 Lansing, MI 48908-0167
Shipping address for returns	2727 Snow Road Lansing, MI 48917
Phone	Toll free: (800) 248-0892 International: (517) 322-2144
Email	service@airliftcompany.com
Web address	www.airliftcompany.com

Need Help?

Contact our customer service department by calling (800) 248-0892. For calls from outside the USA or Canada, our local number is (517) 322-2144.

Thank you for purchasing Air Lift Performance products!

Air Lift Performance • 2727 Snow Road • Lansing, MI 48917 or PO Box 80167 • Lansing, MI 48908-0167
Toll Free (800) 248-0892 • Local (517) 322-2144 • Fax (517) 322-0240 • www.airliftperformance.com

Printed in
the USA

Kit 75691

Volkswagen MKVI Golf R
Audi TT RS
Rear Application

INSTALLATION GUIDE

For maximum effectiveness and safety, please read these instructions completely before proceeding with installation.

Failure to read these instructions can result in an incorrect installation.

MN-871 • (021303) • ECR 7578

TABLE OF CONTENTS

Introduction 2
Notation Explanation 2
Important Safety Notices 2

Important Safety Notices 2

Installation Diagram 3
Hardware List 3

Installing the Air Suspension 4
Preparing the Stock Vehicle 4
Installing the Air Spring 4

Before Operating 7
Setting the Ride Height 7
Torque Specifications 7
Suggested Driving Air Pressure and Maximum Air Pressure 7
Installation Checklist 8
Post-Installation Checklist 8

Use, Maintenance and Servicing 9
Tuning the Air Pressure 9
Tips for Installing Air Lines 10
Checking for Leaks 10
Fixing Leaks 10

Troubleshooting Guide 11

Limited Warranty and Return Policy 12

Replacement Part Information 13

Contact Information 13

Introduction

Air Lift Performance thanks you for purchasing the most complete, fully engineered high-performance air suspension made for the Volkswagen MKVI Golf R/Audi TT RS. Read these installation instructions to correctly and safely set up the vehicle for a #lifeonair.

Air Lift assumes that the installer has the mechanical knowledge and ability to work on vehicle suspension systems and has basic tools necessary to complete the project. Special tools needed to complete the installation are noted on the Installation Diagram page.

Air Lift reserves the right to make changes and improvements to its products and publications at any time. For the latest version of this manual, contact Air Lift Performance at **(800) 248-0892** or visit **www.airliftperformance.com**.

An Air Lift Performance air management system is highly recommended for this product. Learn more at **air-lift.co/productlines**.

NOTATION EXPLANATION

Hazard notations appear in various locations in this publication. Information which is highlighted by one of these notations must be observed to help minimize risk of personal injury or possible improper installation which may render the vehicle unsafe. Notes are used to help emphasize areas of procedural importance and provide helpful suggestions. The following definitions explain the use of these notations as they appear throughout this guide.

⚠ DANGER INDICATES IMMEDIATE HAZARDS WHICH WILL RESULT IN SEVERE PERSONAL INJURY OR DEATH.

⚠ WARNING INDICATES HAZARDS OR UNSAFE PRACTICES WHICH COULD RESULT IN SEVERE PERSONAL INJURY OR DEATH.

⚠ CAUTION INDICATES HAZARDS OR UNSAFE PRACTICES WHICH COULD RESULT IN DAMAGE TO THE MACHINE OR MINOR PERSONAL INJURY.

NOTE *Indicates a procedure, practice or hint which is important to highlight.*

Important Safety Notices

⚠ WARNING DO NOT INFLATE AIR SPRINGS WHILE OFF OF THE VEHICLE. DAMAGE TO ASSEMBLY MAY RESULT AND VOID WARRANTY.

⚠ CAUTION DO NOT WELD TO OR MODIFY PERFORMANCE STRUTS/SHOCKS IN ANY WAY. DAMAGE TO UNIT MAY OCCUR AND WILL VOID WARRANTY.

Installation Diagram

HARDWARE LIST

Item	Part #	Description	Qty
A	18585	3/8”-16 Rivet Nut	2
B	18436	3/8”-16 Nut	2
C	17463	3/8”-16 X 2.0” Threaded Rod	2
D	17465	3/8”-16 X 3.25” Threaded Rod	2
E	13985	Spring Seat Spacer	2
F	58531	Air Spring 2B6 Regular (Recess Mount)	2
G	21779	1/4” MNPT X 1/4” PTC Elbow (DOT)	2
H	21851	1/4” MNPT X 3/8” PTC 90° (DOT)	2
I	03993	Lower Bracket, MKV/VI Golf R	2
J	18427	3/8” Lock Washer	4
K	17101	3/8”-16 X 3/4” Hex Bolt	4
L	13980	Spring Seat Centering Spacer	2
M	17442	3/8”-16 X 3.0” Hex Cap Screw	2

NOTE

OEM SPRING SEAT:

1. USE SHORT THREADED ROD (C).
2. USE RED LOCTITE ON THE THREADED ROD INTO THE UPPER AIR SPRING END CAP.
3. JAM NUTS (B) TOGETHER ON STUD AND USE TO TIGHTEN ROD INTO AIR SPRING UPPER END CAP. THEN REMOVE BOTH NUTS.

CUT SPRING SEAT:

1. USE LONG THREADED ROD (D).
2. USE RED LOCTITE ON THE THREADED ROD INTO THE UPPER AIRSPRING END CAP.
3. JAM NUTS (B) TOGETHER ON STUD AND USE TO TIGHTEN ROD INTO AIR SPRING UPPER END CAP. THEN REMOVE BOTH NUTS.

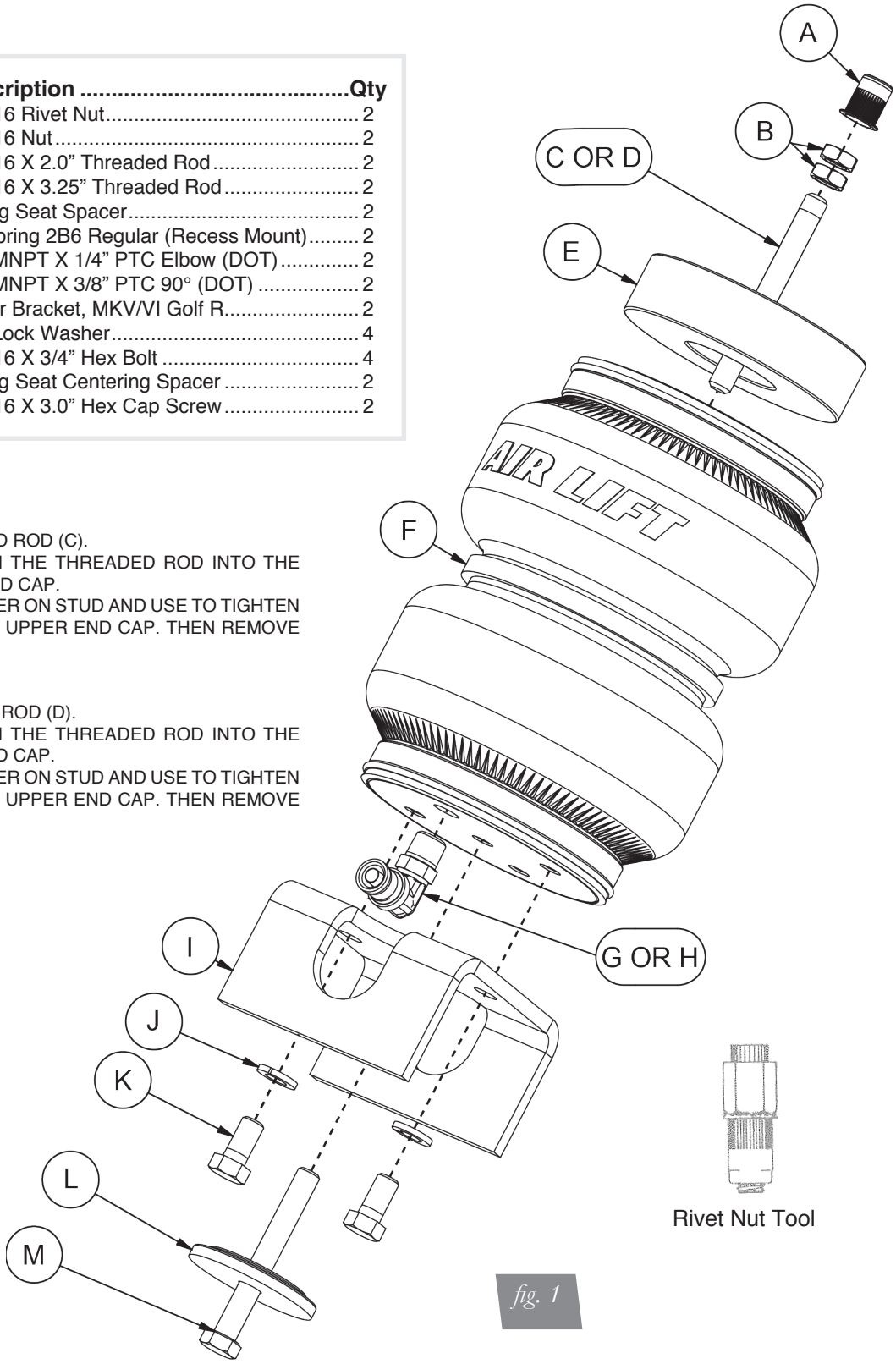

fig. 1

STOP! Missing or damaged parts? Call Air Lift customer service at (800) 248-0892 for a replacement part.

Installing the Air Suspension

PREPARING THE STOCK VEHICLE

1. Elevate the vehicle and support the body with a hoist or jack stands.
2. Remove the rear wheels.

NOTE *If the vehicle is equipped with automatic vertical headlight control, disconnect the coupling rod from the lower transverse link (fig. 2).*

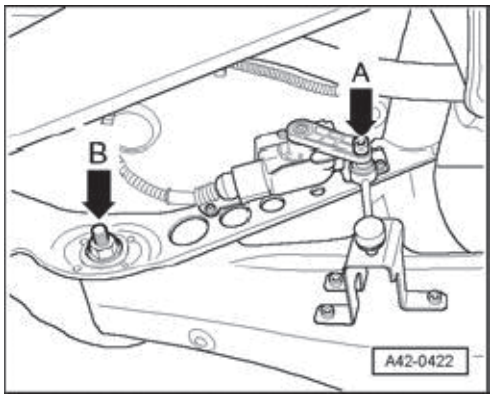

fig. 2

3. To remove the coil spring, it is recommended that you use a spring compressor.

CAUTION COIL SPRING UNDER COMPRESSION: THE COIL SPRING CAN BE REMOVED BY SECURELY SUPPORTING THE LOWER TRANSVERSE LINK WITH A JACK AND REMOVING THE LOWER MOUNTING BOLT FROM THE WHEEL BEARING HOUSING. SLOWLY LOWER THE TRANSVERSE LINK UNTIL THE SPRING IS LOOSE AND FREE FROM TENSION.

4. Remove the rubber isolator in the lower transverse link.
5. Disconnect the lower transverse link from the hub.

INSTALLING THE AIR SPRING

1. Use a 17/32” drill bit to enlarge the hole in the upper coil spring perch. If the upper coil spring perch has been removed, drill in the center of where the perch used to be.

NOTE *The hole must be 17/32” for the rivet nut to be effective (figs 3-6).*

Factory/OEM Upper Spring Perch

fig. 3

fig. 4

Previously Cut Spring Perch

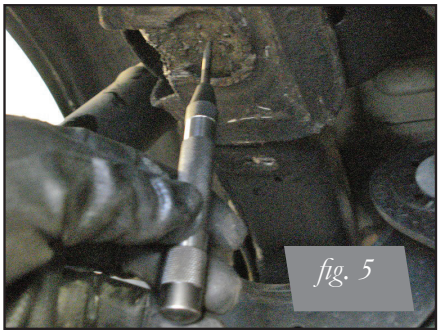
fig. 5

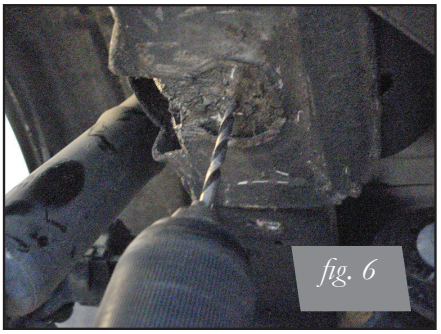
fig. 6

2. Assemble the rivet nut and rivet nut tool together and insert into the 17/32” hole. Review diagram below on how to attach the rivet nut to the vehicle. (fig. 7).

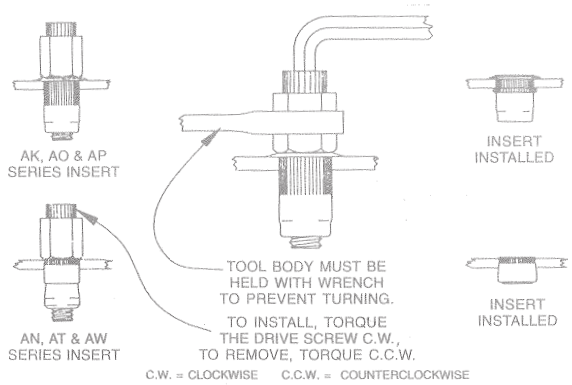

fig. 7

3. Two lengths of threaded studs are included with the kit (C or D, fig. 1). The shorter stud is for vehicles that retain the coil spring perch bump. The longer threaded stud is for vehicles without the spring perch bump. Apply Loctite to the threads of the upper end cap and thread in the appropriate stud. Take the supplied nuts and thread both onto one stud (figs. 8 & 9). Using the nuts jammed together, tighten the stud into the end cap until it bottoms (fig. 10). Remove both nuts (fig. 11).

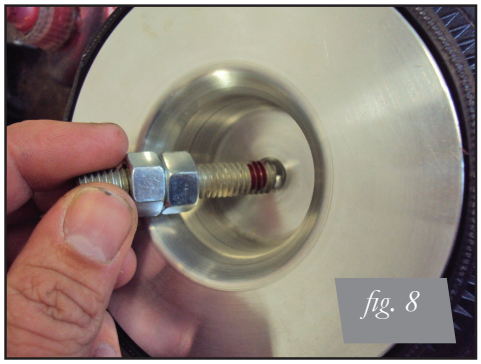
fig. 8

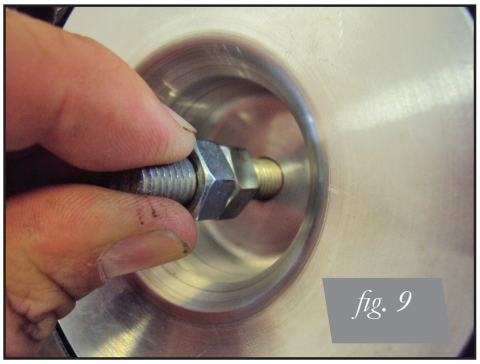
fig. 9

fig. 10

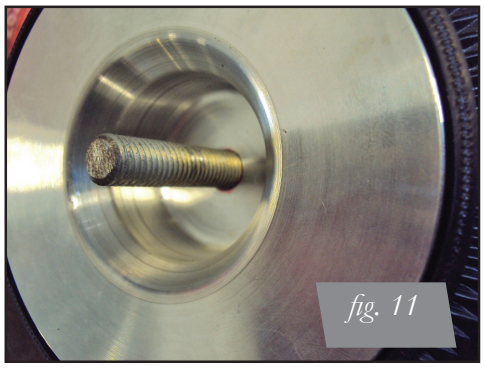
fig. 11

4. Coat threads with thread sealant. Tighten the fitting 1 3/4 turns beyond hand tight.
5. Place spacer around the upper spring perch and thread the air spring into the nutsert. Tighten by hand (fig. 12).

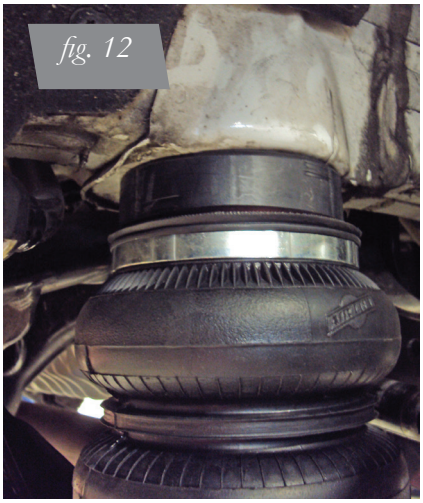
fig. 12

6. Orient the air fitting inline with lower transverse link toward the center of the vehicle.
7. Attach the lower bracket with the lock washer and bolts provided (figs. 13 & 14). Torque to 27Nm (20 lb.-ft.).

fig. 13

fig. 14

8. Route the air line from the center of the cross-member, through the lower transverse link and attach insert into the air fitting (fig. 15).
9. Reattach the lower transverse link to the hub. Do not torque at this time (fig. 16).

fig. 15

fig. 16

10. Install the lower centering washer and bolt through the lower transverse link and into the air spring assembly (fig. 17). Torque to 27Nm (20 lb.-ft.).

fig. 17

Before Operating

SETTING THE RIDE HEIGHT

1. With the suspension fully compressed, take a measurement from the fender to a chosen reference point – typically the center of the axle. Record this measurement as max compression (MC).
2. Cycle the suspension to max extension (ME) and record the measurement from the fender to the same reference point.
3. Add ME and MC, then divide the total by 2. Set the suspension to this point. This position will give 50% stroke in either direction and is a starting point for ride height (Fig. 18).
4. With the suspension at this position, loosen, then re-torque the lower control arm bolts to manufacturer's specifications (Table 1):

Formula for Calculating Ride Height
(ME+MC)÷2=MID STROKE

fig. 18

Torque Specifications		
Location of Bolt	Nm	lb.-ft.
Transverse link to wheel bearing housing	90	66
Transverse link to subframe (toe adjustment)	95	70
Upper control arm to subframe (camber adjustment)	95	70
Upper control arm to wheel bearing housing	130+90˚	96+90˚
Trailing arm to mounting bracket	90+90˚	66+90˚
Shock upper mount	45+45˚	33+45˚
Shock to wheel bearing housing	180	133
Wheels	120	89
Air spring to lower bracket	27	20

Table 1

Suggested Driving Air Pressure	Maximum Air Pressure
40-70 PSI	**125 PSI**
FAILURE TO MAINTAIN ADEQUATE MINIMUM PRESSURE (OR PRESSURE PROPORTIONAL TO LOAD) MAY RESULT IN EXCESSIVE BOTTOMING OUT AND **WILL VOID THE WARRANTY**.	

Table 2

INSTALLATION CHECKLIST

☐ **Clearance** — Inflate the air springs to 75-90 PSI and make sure there is at least 1/2" clearance from anything that might rub against the air spring. This should be checked with the air spring fully inflated and fully deflated.

☐ **Leak** — Inflate the air springs to 75-90 PSI and check all connections for leaks. All leaks must be eliminated before the vehicle is road tested.

☐ **Heat** — Be sure there is sufficient clearance from heat sources, at least 6" for air springs and air lines. If a heat shield was included in the kit, install it. If there is no heat shield, but one is required, call Air Lift customer service at **(800) 248-0892**.

☐ **Fastener** — Recheck all bolts for proper torque.

☐ **Road** — Inflate the springs to recommended driving pressures. Drive the vehicle 10 miles and recheck for clearance, loose fasteners and air leaks.

☐ **Operating instructions** — If professionally installed, the installer should review the operating instructions with the owner. Be sure to provide the owner with all paperwork that came with the kit.

POST-INSTALLATION CHECKLIST

☐ **Overnight leak down test** — Recheck air pressure 24 hours after installation and driving of the vehicle. If the pressure has dropped more than 5 PSI, there is a leak that must be fixed.

☐ **Air pressure requirements** — It is important to understand the air pressure requirements of the air spring system. Regardless of load, the air pressure should always be adjusted to maintain adequate ride height at all times while driving.

☐ **Thirty-day or 500-mile test** —Recheck the air spring system after 30 days or 500 miles, whichever comes first. If any part shows signs of rubbing or abrasion, the source should be identified and moved, if possible. If it is not possible to relocate the cause of the abrasion, the air spring may need to be remounted. If professionally installed, the installer should be consulted. Check all fasteners for tightness.

Use, Maintenance and Servicing

1. An Air Lift air management system is strongly recommended for this product, but it is possible to operate without one. The air lines can be routed to Schrader valves for use with a separate air compressor. Air lines and Schrader valves are not included with Air Lift Performance kits and would need to be purchased separately. To learn more about Air Lift management systems visit **air-lift.co/productlines**.
2. Check the air pressure before driving.

⚠ WARNING

BEFORE SERVICING THE VEHICLE, MAKE SURE TO TURN OFF “RISE ON START” AND “PRESET MAINTAIN.” THIS WILL ELIMINATE ANY UNINTENDED SUSPENSION CYCLING IF YOU NEED TO TURN THE KEY ON IN THE VEHICLE FOR ANY REASON.

TUNING THE AIR PRESSURE.

Pressure determination comes down to three things — level vehicle, ride comfort and stability.

1. **Level vehicle**

   Depending on load, it is possible one side will need more pressure than the other to level the vehicle.

2. **Ride comfort**

   If the vehicle has a harsh ride, it may be due to either too much pressure or not enough causing frequent bottoming. Also, riding the vehicle at the top, or close to the top of the available stroke will cause an uncomfortable ride due to a lack of rebound travel. This situation should be avoided for driving any significant distance. Try different pressures to determine the best ride comfort. See the Air Lift suggested driving air pressure for this vehicle (Table 2).

3. **Stability**

   Stability translates into safety and should be the priority, meaning the driver may need to sacrifice a perfectly level and comfortable ride. Stability issues include roll control, bounce, dive during braking and sponginess. Tuning out these problems usually requires additional air pressure, damping or both.

TIPS FOR INSTALLING AIR LINES

When cutting air lines, use a sharp knife or a hose cutter and make clean, square cuts (Fig. 19). Do not use scissors or wire cutters because these tools will deform the air line, causing it to leak around fittings. Do not cut the lines at an angle.

Do not bend the 1/4” hose at a radius of less than 1” and do not put side load pressure on fitting. The hose should be straight beyond the fitting for 1” before bending.

Inspect hose for scratches that run lengthwise on hose prior to installation. Contact Air Lift customer service at **(800) 248-0892** if the air line is damaged.

To watch a video demonstrating proper air line cutting, go to air-lift.co/cuttingairline

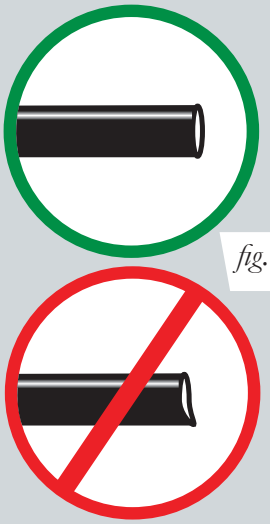

fig. 19

CHECKING FOR LEAKS

1. Inflate the air spring to at least 80 PSI.
2. Spray all connections with a solution of 1/5 liquid dish soap and 4/5 water. Spot leaks easily by looking for bubbles in the soapy water.
4. Check the air pressure again after 24 hours. A 2-4 PSI loss after initial installation is normal. Retest for leaks if the loss is more than 5 PSI.

FIXING LEAKS

1. **Air line to PTC fitting**: Try pushing the air line firmly into the fitting to ensure it is properly seated. If leak persists, deflate the spring and remove the air line by pushing the collar toward the fitting body and pulling firmly on the air line. Trim 1” off the end of the air line making sure the cut is clean and square. Reinsert air line firmly into fitting and pull back on the air line to make sure it is seated.
2. **Threaded connection**: If possible, tighten the fitting another half turn. If the leak persists, deflate spring, remove fitting and re-coat threads with thread sealant. Reinstall to hand tight and then use wrench to finish tightening an additional 1 3/4 turns.
3. **Air spring O-ring seal**: If a leak is found at the upper or lower air spring seal on a strut or shock, contact Air Lift customer service at **(800) 248-0892.**

Troubleshooting Guide

PROBLEM	CAUSE	SOLUTION
Air spring won't maintain pressure.	*Leak at fitting, air line not cut properly or damage to air line during installation.*	*Find location of leak by spraying listed components with soapy water solution and look for bubbles. Tighten air fitting, re-cut air line or replace damaged components.*
	Leak at lower O-ring on damper if air spring is over the damper.	*Spray bottom of air spring with soapy water solution and look for bubbles. Contact Air Lift customer service at* **(800) 248-0892** *to determine if component should be replaced.*
Knocking noise when hitting bumps.	*Loose suspension component such as locking collar on damper.*	*Tighten lower locking collar with significant force, check and tighten suspension components to factory specs at desired ride height.*
	Driving vehicle too close to maximum extension.	*Check current ride height and compare to maximum height. If there is less than 1" (25mm) difference, reduce air pressure to lower ride height.*
		Lengthen strut or shock to increase available up travel.
Suspension bottoms out.	*Air pressure is too low, causing air springs to bottom out.*	*Raise air pressure.*
The ride is too bouncy.	*Air pressure is too high, causing air springs to be too stiff.*	*Lower air pressure and adjust damper length if necessary to achieve proper ride height.*
	Damping is inadequate.	*Increase damping with adjusters.*
The ride is too soft or floaty.	*Damping is inadequate.*	
The ride is too harsh.	*Excessive damping.*	*Reduce damping with adjusters.*

Limited Warranty and Return Policy

WHAT THIS WARRANTY COVERS

Air Lift Company warrants to the original purchaser for a period of one year from the date of original purchase that the Air Lift Performance damper kits will be free from defects in workmanship and materials for the normal expected life of the part when used on cars and trucks as specified by Air Lift Company and under normal operating conditions, subject to the requirements and exclusions set forth below.

WHAT THIS WARRANTY DOES NOT COVER

The warranty does not apply to products that have been improperly applied, improperly installed, or which have not been maintained in accordance with installation instructions furnished with all products. This warranty does not apply and is void if damage or failure is caused by: accident, abuse, misuse (including but not limited to racing or off-road activities or commercial use), abnormal use, faulty installation, liquid contact, fire, earthquake or other external cause; operating the product outside Air Lift Company's instructions, specifications or guidelines; or service, alteration, maintenance or repairs performed by anyone other than Air Lift Company to the product from its purchased condition. This warranty also does not apply to: Universal Air (Fabricator Kits), consumable parts, such as batteries; cosmetic damage, including but not limited to scratches or dents; defects caused by normal wear and tear or otherwise due to the normal aging of the product, or if any serial or identification number has been removed or defaced from the product. Air Lift Company reserves the right to change the design of any product without assuming any obligation to modify any product previously manufactured.

LIMITATION OF LIABILITY

To the extent permitted by law, this warranty and the remedies set forth herein are exclusive and in lieu of all other warranties, remedies and conditions, whether oral, written, statutory, express or implied. AIR LIFT COMPANY DISCLAIMS ALL STATUTORY AND IMPLIED WARRANTIES, INCLUDING WITHOUT LIMITATION, WARRANTIES OF MERCHANTABILITY AND FITNESS FOR A PARTICULAR PURPOSE AND WARRANTIES AGAINST HIDDEN OR LATENT DEFECTS TO THE EXTENT PERMITTED BY LAW. To the extent such warranties cannot be disclaimed, such implied warranties shall apply only for the warranty period specified above. Please note that some states do not allow limitation on how long an implied warranty (or condition) lasts. So the above limitation may not apply to you.

Except as provided in this warranty and to the extent permitted by law, Air Lift Company shall not be liable for any direct, special, incidental or consequential damages resulting from any breach of warranty or condition, or arising in connection with the sale, use or repair of air lift products, or under any other legal theory, including but not limited to loss of use, loss of revenue, loss of actual or anticipated profits, loss of the use of money, loss of business, loss of opportunity, loss of goodwill, and loss of reputation. Air Lift Company's maximum liability shall not in any case exceed the purchase price paid by you for the Air Lift product. Please note that some states do not allow the exclusion or limitation of incidental or consequential damages, so the above limitation or exclusion may not apply to you.

HOW TO GET SERVICE

If a defect in workmanship or materials causes your Air Lift Performance product to become inoperable within the warranty period, before returning any defective product, call Air Lift Company at (800) 248-0892 in the U.S. and Canada (elsewhere, (517) 322-2144) to obtain a Returned Materials Authorization (RMA) number. The consumer shall be responsible for removing (labor charges) the defective product from the vehicle and returning it, shipping costs prepaid, to Air Lift Company for verification. Returns to Air Lift Company must be postage prepaid and sent to: Air Lift Company • 2727 Snow Road • Lansing, MI • 48917. You must prove to the satisfaction of Air Lift Company the date of original purchase of your Air Lift Performance product. You must also enclose the RMA number and a return address. A minimum $10 shipping and handling charge will apply to all warranty claims. You must also pack the product to minimize the risk of it being damaged in transit. If we receive a product in damaged condition as the result of shipping, we will notify you and you must seek a claim with the shipper.

WHAT AIR LIFT COMPANY WILL DO

If you submit a valid claim to Air Lift Company during the warranty period, Air Lift Company will, at its option, repair your Air Lift Performance product or furnish you with a new or rebuilt product. Air Lift Company will not reimburse you for repairs or replacement parts provided by other parties. Your repaired or replacement Air Lift Performance product will be returned to you (subject to payment of the required warranty claim shipping and handling charge) and it will be covered under the warranty for the balance of the warranty period, if any. When a product or part is replaced, any replacement item becomes your property and the replaced item becomes property of Air Lift Company. You are responsible for installation/reinstallation (labor charges) of the product.

HOW THE LAW RELATES TO THIS WARRANTY

This warranty gives you specific legal rights and you may also have other rights which vary from state to state. By this warranty, Air Lift Company does not limit or exclude your rights except as allowed by law. To fully understand your rights, you should consult the laws of your state.

Replacement Part Information

If replacement parts are needed, contact the local dealer or call Air Lift customer service at **(800) 248-0892**. Most parts are immediately available and can be shipped the same day.

Contact Air Lift Company customer service at (800) 248-0892 first if:

- Parts are missing from the kit.
- Need technical assistance on installation or operation.
- Broken or defective parts in the kit.
- Wrong parts in the kit.
- Have a warranty claim or question.

Contact the retailer where the kit was purchased:

- If it is necessary to return or exchange the kit for any reason.
- If there is a problem with shipping if shipped from the retailer.
- If there is a problem with the price.

Contact Information

Mailing address	P.O. Box 80167 Lansing, MI 48908-0167
Shipping address for returns	2727 Snow Road Lansing, MI 48917
Phone	Toll free: (800) 248-0892 International: (517) 322-2144
Email	service@airliftcompany.com
Web address	www.airliftcompany.com

NEED HELP?

Contact Air Lift Company customer service department by calling (800) 248-0892. For calls from outside the USA or Canada, dial (517) 322-2144.

Connect by searching for **Air Lift Performance** *#LifeonAir*

Thank you for purchasing Air Lift Performance products!

Air Lift Performance • 2727 Snow Road • Lansing, MI 48917 or P.O. Box 80167 • Lansing, MI 48908-0167
Toll Free (800) 248-0892 • Local (517) 322-2144 • Fax (517) 322-0240 • www.airliftperformance.com

Printed in the USA
BGL-0616