Kit 75576

Volkswagen
MKV & MKVI Platform

Front Application

(for vehicles with 55mm lower strut diameter)

INSTALLATION GUIDE

For maximum effectiveness and safety, please read these instructions completely before proceeding with installation.

Failure to read these instructions can result in an incorrect installation.

MN-868 • (031603) • ECR 8222

TABLE OF CONTENTS

Introduction 2
Notation Explanation 2

Important Safety Notices 2

Installation Diagram 3
Hardware List 3
Tools List 3

Installing the Air Suspension 4
Preparing the Vehicle. 4
Removal of Stock Suspension 4
Installing the Kit Components 6
Routing Air Lines 6

Before Operating 7
Setting the Ride Height 7
Torque Specifications 7
Suggested Driving Air Pressure and Maximum Air Pressure 7
Check for Binding 8
Damping Adjustment. 8
Aligning the Vehicle 8
Use Lower Mount to Adjust Extended or Drop Height 9
Installation Checklist 10
Post-installation Checklist. 10

Use, Maintenance and Servicing 11
Tuning the Air Pressure 11

Troubleshooting Guide 12
Tips for Installing Air Lines 13
Checking for Leaks 13
Fixing Leaks 13

Limited Warranty and Return Policy 17

Replacement Part Information. 17

Contact Information 17

Introduction

Air Lift Performance thanks you for purchasing the most complete, fully engineered high-performance air suspension made for the Volkswagen MKV &MKVI. Read these installation instructions to correctly and safely set up the vehicle for a #lifeonair.

Air Lift assumes that the installer has the mechanical knowledge and ability to work on vehicle suspension systems and has basic tools necessary to complete the project. Special tools needed to complete the installation are noted on the Installation Diagram page.

Air Lift reserves the right to make changes and improvements to its products and publications at any time. For the latest version of this manual, contact Air Lift Performance at **(800) 248-0892** or visit **www.airliftperformance.com**.

An Air Lift Performance air management system is highly recommended for this product. Learn more at **air-lift.co/productlines**.

NOTATION EXPLANATION

Hazard notations appear in various locations in this publication. Information which is highlighted by one of these notations must be observed to help minimize risk of personal injury or possible improper installation which may render the vehicle unsafe. Notes are used to help emphasize areas of procedural importance and provide helpful suggestions. The following definitions explain the use of these notations as they appear throughout this guide.

⚠ DANGER INDICATES IMMEDIATE HAZARDS WHICH WILL RESULT IN SEVERE PERSONAL INJURY OR DEATH.

⚠ WARNING INDICATES HAZARDS OR UNSAFE PRACTICES WHICH COULD RESULT IN SEVERE PERSONAL INJURY OR DEATH.

⚠ CAUTION INDICATES HAZARDS OR UNSAFE PRACTICES WHICH COULD RESULT IN DAMAGE TO THE MACHINE OR MINOR PERSONAL INJURY.

NOTE *Indicates a procedure, practice or hint which is important to highlight.*

Important Safety Notices

⚠ WARNING DO NOT INFLATE AIR SPRINGS WHILE OFF OF THE VEHICLE. DAMAGE TO ASSEMBLY MAY RESULT AND VOID WARRANTY.

⚠ CAUTION DO NOT WELD TO OR MODIFY PERFORMANCE STRUTS/SHOCKS IN ANY WAY. DAMAGE TO UNIT MAY OCCUR AND WILL VOID WARRANTY.

Installation Diagram

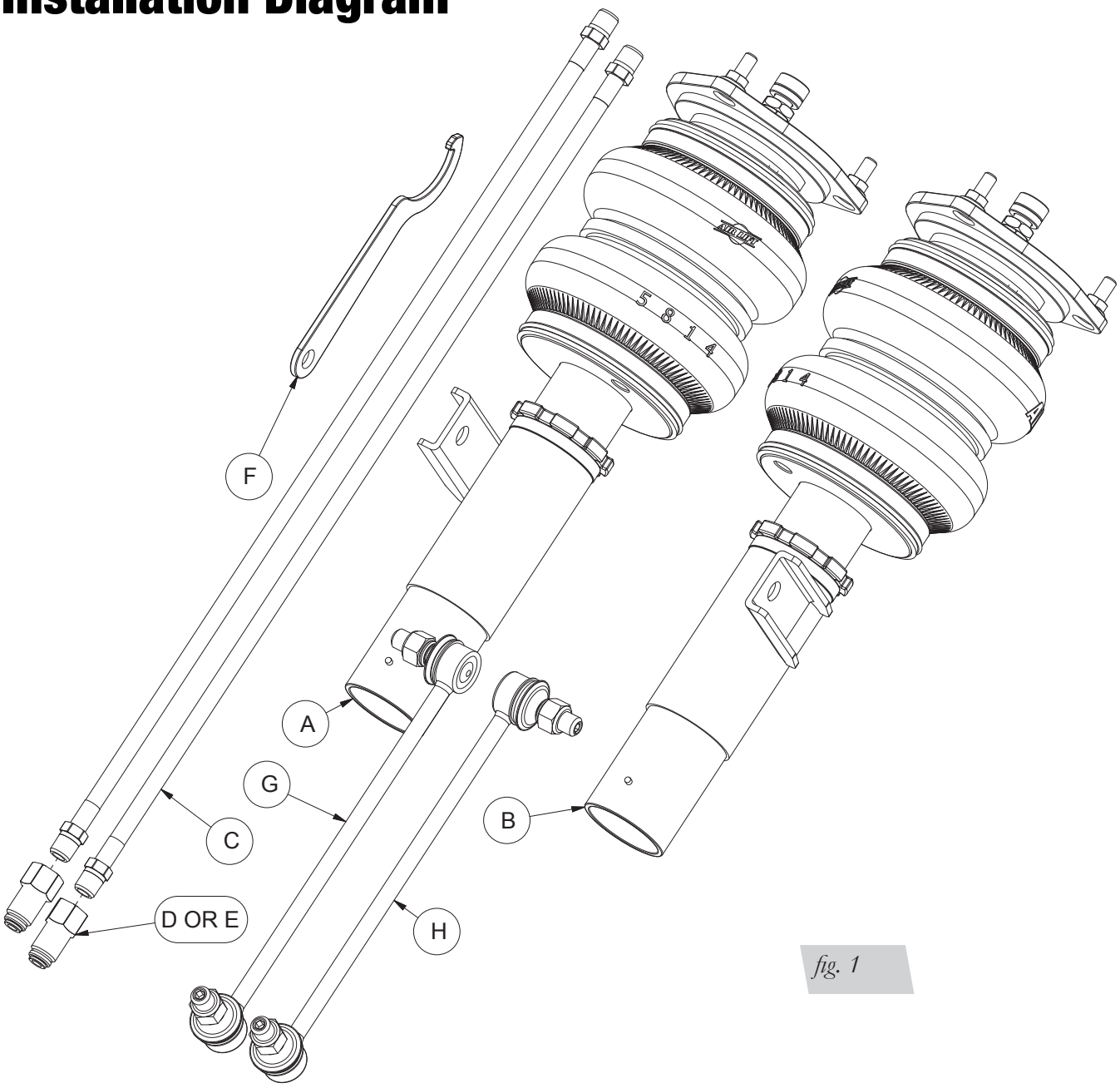

fig. 1

TOOLS LIST

Description
Jack
Jack stands or hoist
Torque wrench
Metric Wrenches
Standard Wrenches
VW Spreader 3424

HARDWARE LIST

Item	Part #	Description	Qty
A	35234	Strut assembly, MKV/VI Front (55mm) R	1
B	35235	Strut assembly, MKV/VI Front (55mm) L	1
C	20997	Leader Hose, 1/4” ID	2
D	21987	Union, 1/4”FNPT X 3/8” PTC, DOT	2
E	21810	Union, 1/4”FNPT X 1/4” PTC, DOT	2
F		Collar Wrench	1
G		End Link - 260mm RIGHT	1
H		End Link - 260mm LEFT	1

STOP! Missing or damaged parts? Call Air Lift customer service at (800) 248-0892 for a replacement part.

Installing the Air Suspension

DANGER

THIS APPLICATION IS DESIGNED FOR PREVIOUSLY MODIFIED VEHICLES WHERE THE FRAME HAS BEEN NOTCHED FOR AXLE CLEARANCE. AIR LIFT COMPANY DOES NOT RECOMMEND FRAME MODIFICATION AND ANY MODIFICATIONS PREVIOUSLY DONE ARE AT THE OWNER'S RISK. AIR LIFT COMPANY IS NOT LIABLE FOR VEHICLE

PREPARING THE VEHICLE

1. Elevate the vehicle and support the body with a hoist or jack stands.
2. Remove the front wheels.

NOTE

If the vehicle is equipped with Automatic Headlight Vertical Aim Control, detach the unit from the lower control arm (Fig. 2 - part 1) to prevent overextension.

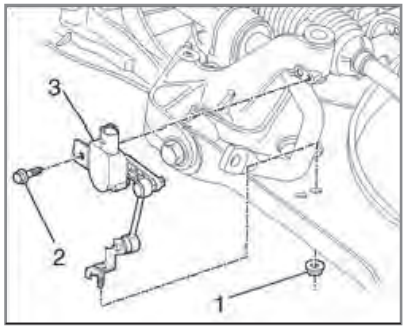

fig. 2

REMOVAL OF STOCK SUSPENSION

1. Unbolt the sway bar from the tab (Fig. 3). For sway bar removal instructions see factory repair manual.
2. Unthread and remove the axle bolt from the hub assembly (Fig. 3a).

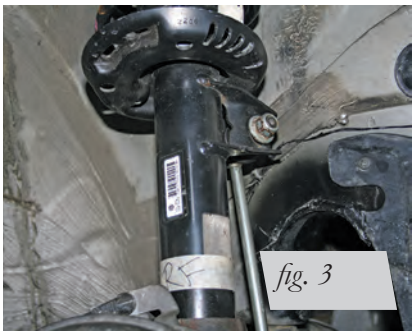

fig. 3

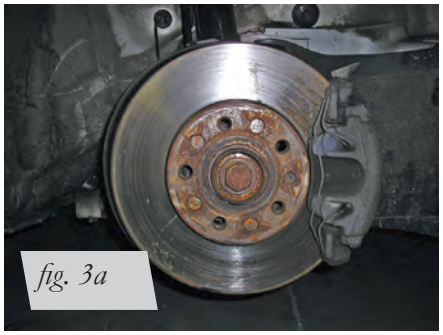

fig. 3a

3. Remove the three lower nuts from the lower ball joint and control arm (Fig. 4). Detach the ball joint and hub assembly from the control arm.

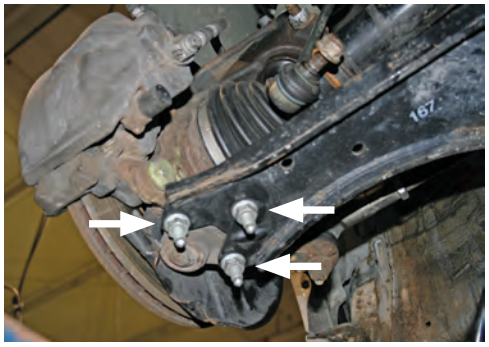

fig. 4

4. Pull drive axle out of the hub assembly and secure the axle to the body with wire.

⚠ CAUTION

TO PREVENT DAMAGE TO THE INNER AXLE JOINT, DO NOT ALLOW THE AXLE TO HANG FREE.

5. Reattach the lower ball joint to the lower control arm.
6. Support the hub assembly.
7. Remove the bolt at the back of the hub assembly to the strut.
8. Spread the hub assembly slot and push down on the hub to release the strut from its lower mount (Fig. 5). Volkswagen specific tool is spreader 3424.

fig. 5

9. Pull weather-stripping away from the plenum chamber cover within the engine bay and pull the cover up. Removing the wiper arms and completely removing the cover will gain more access.
10. Remove the three bolts from the upper strut mount (Fig. 6) and remove the strut assembly from the vehicle.

fig. 6

INSTALLING THE KIT COMPONENTS

1. Prior to installing the strut, attach the braided line provided to the threaded port at the bottom of the air spring (Fig. 7). Seal with Teflon tape or thread sealant. Seal and thread supplied fitting to the end of braided hose.

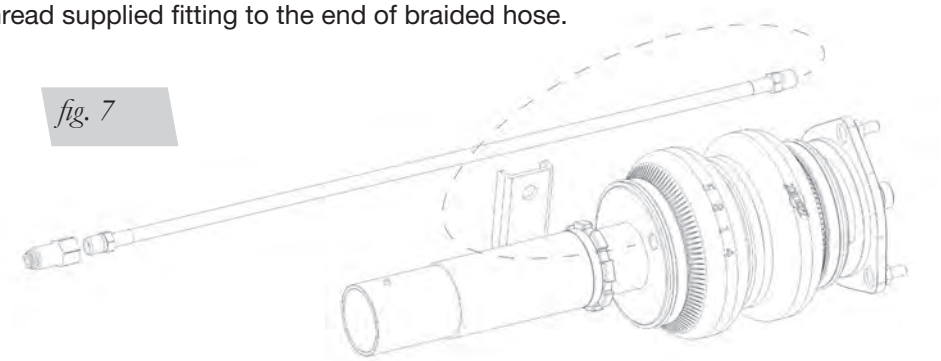

fig. 7

2. Insert strut into the hub assembly. Reinstall the lower mounting bolt and torque to 70 Nm (52 lb.-ft.).
3. Lift assembly into strut pocket and align upper mounting bolts with three holes. Using the supplied nuts and washers, tighten the upper mount to 37 Nm (27 lb.-ft.).
4. Remove the lower ball joint bolts again and separate the control arm from the joint. Reinsert the axle.
5. Reinstall the ball joint nuts and torque to 60 Nm (44 lb.-ft.).
6. Torque the hex head drive axle to 200 NM (148 lb.-ft.). If the bolt is a 12 point, torque to 70 NM (52 lb.-ft.).
7. Reinstall the plenum chamber cover and wiper arms if previously removed.

ROUTING THE AIR LINES

1. Fully compress the suspension using a jack. With the suspension compressed, review the best routing for the leader hose that is clear of all suspension and steering components.
2. Routing should allow for the suspension to extend and steer without kinking, pulling the line tight or rubbing on other components. Following the brake line routing is often a good place to start. Check clearances to all other components.

Before Operating

SETTING THE RIDE HEIGHT

1. With the suspension fully compressed, take a measurement from the fender to a chosen reference point – typically the center of the axle. Record this measurement as max compression (MC).
2. Cycle the suspension to max extension (ME) and record the measurement from the fender to the same reference point.
3. Add ME and MC, then divide the total by 2. Set the suspension to this point. This position will give 50% stroke in either direction and is a starting point for ride height (Fig. 8).

Formula for Calculating Ride Height
(ME+MC)÷2=MID STROKE

fig. 8

4. With the suspension at this position, loosen, then re-torque all suspension bushing pivot joint fasteners to the manufacturer's specifications (Table 1):

Torque Specifications		
Location	Nm	Lb.-ft.
Strut Lower Mount Pinch Bolt	70	52
Strut Upper Mount Nuts	37	27
Ball Joint Nuts	60	44
Hex Head Drive Axle Bolt	200	148
12 Point Drive Axle Bolt	70	52

Table 1

Suggested Driving Air Pressure	Maximum Air Pressure
45 PSI	**125 PSI**
FAILURE TO MAINTAIN ADEQUATE MINIMUM PRESSURE (OR PRESSURE PROPORTIONAL TO LOAD) MAY RESULT IN EXCESSIVE BOTTOMING OUT AND **WILL VOID THE WARRANTY**.	

Table 2

CHECK FOR BINDING

1. Inflate and deflate the system (do not exceed 125 PSI) to check for clearance or binding issues. With the air springs deflated, check clearances on everything so as not to pinch brake lines, vent tubes, etc. Clear lines if necessary.
2. Inflate the air springs to 75-90 PSI and check all connections for leaks.

CAUTION MAKE SURE THE FRONT WHEELS ARE STRAIGHT WHEN DEFLATING AND REINFLATING AIR BAGS.

DAMPING ADJUSTMENT

Suspension damping is a matter of compromise. Setting it too stiff will make the ride feel jarring. In addition, if the suspension is too stiff, the tires will lose contact with the road, reducing control and power delivery. On the other hand, if the suspension is too soft, the car can experience brake dive and excessive bouncing. The sweet spot lies somewhere in the middle. Air Lift dampers have a range of adjustment, which allows the driver to tune the ride and handling to his or her preferences.

Air Lift recommends damper and air pressure settings for every vehicle kit, but it is impossible to consider every situation. For example, even though Air Lift kits replace the dampers and springs, vehicles with sport-tuned suspensions might have stiffer bushings, larger anti-roll bars, bigger wheels, wider tires, etc. These settings may need to be adjusted to different vehicles and driving characteristics.

1. The dampers in this kit have 30 settings, or “clicks,” of adjustable compression and rebound damping characteristics. Damping is changed through the damper rod using the supplied adjuster (Figs. 9 & 10) or an 3mm hex key (not included).
2. Turn the adjuster clockwise (H) and the damping settings are hardened, reducing oscillations and body motion. Turn the adjuster counterclockwise (S) and the damping is softened.
3. Each damper in this kit is preset to “-15 clicks.” This means that the damper is adjusted 15 clicks away from full stiff, which starts at 0. Counting up from full stiff is the preferred method of keeping track of, or setting, damping. This setting was developed on a 2008 Volkswagen Jetta.

fig. 9

fig. 10

ALIGNING THE VEHICLE

1. Set the vehicle to the height at which it will most often be driven.
2. If the ride height is lower than stock, Air Lift Performance recommends loosening all pivot points (bolts, nuts) on any control arm, strut arm or radius rod that contains bushings. Once they have been loosened, re-torque to stock specifications (Table 1).

NOTE *It may be necessary to cycle the suspension to loosen the bushing from its mount. This will help re-orient the bushing at its new position based on the chosen ride height.*

3. Get a shop alignment of the vehicle at the new chosen ride height.

USE LOWER MOUNT TO ADJUST EXTENDED OR DROP HEIGHT

These dampers have been pre-set at the factory to provide maximum drop height while maintaining adequate tire clearance to the air spring. If you wish to gain more extended height (lift), which is the same as reducing drop height, or want to lower the chassis further and there is still adjustment available at the lower mount, please use the following procedure:

1. Support the vehicle with jack stands or a hoist at approved lifting points.
2. Remove the wheel.
3. Using the supplied spanner wrench, loosen the locking collar (Fig. 11).
4. Deflate the air spring to 0 PSI on the corner you are adjusting.
5. Disconnect lower mount from suspension.
6. Spin the lower mount to the desired level.

NOTE

Not all vehicles will have further drop height available.

7. Re-install lower mount to suspension and torque fasteners.
8. Tighten the lower locking collar to the lower mount using significant force.

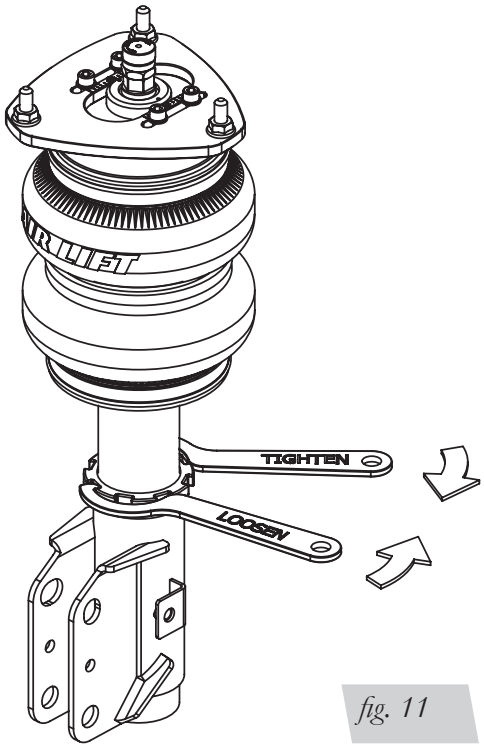

The dampers in this kit may look different, but they all allow adjustment of the locking collar with the included spanner wrench.

fig. 11

CAUTION WHEN ADJUSTING HEIGHT UPWARD, MAKE SURE THAT THE DAMPER BODY ENGAGES ALL THE THREADS OF THE LOWER MOUNT (FIG. 12). WHEN ADJUSTING DOWNWARD, MAKE SURE THERE IS ADEQUATE AIR SPRING CLEARANCE TO THE TIRE/WHEEL ASSEMBLY. CLEARANCE MUST BE CHECKED WITH THE SYSTEM FULLY DEFLATED AS WELL AS FULLY INFLATED TO ENSURE THAT NO RUBBING OCCURS. FAILURE TO MAINTAIN ADEQUATE CLEARANCE CAN RESULT IN AIR SPRING FAILURE AND WILL NOT BE COVERED UNDER WARRANTY.

CAUTION DO NOT ADJUST HEIGHT BY SPINNING AIR SPRING ON DAMPER! DOING SO MAY CAUSE AN AIR LEAK AND COMPROMISE THE ASSEMBLY.

FOR STRUTS:

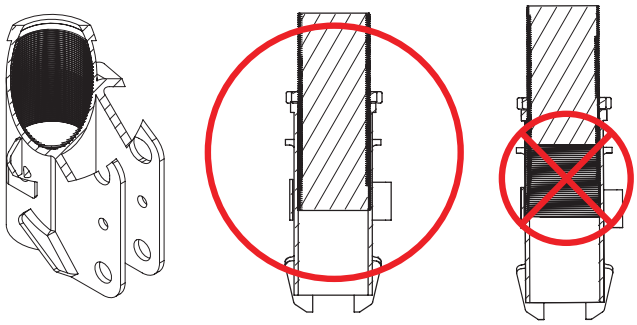

OK, no threads showing.

Not OK, threads are showing.

FOR SHOCKS:

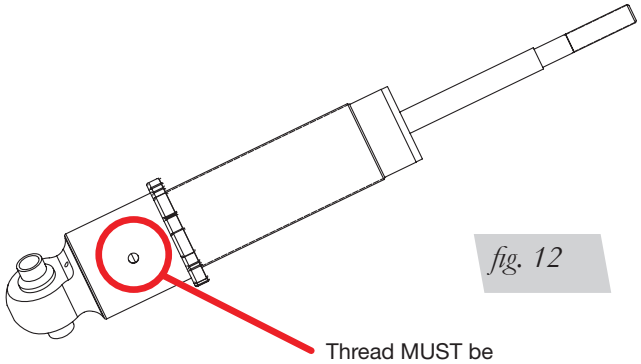

Thread MUST be showing in window.

fig. 12

INSTALLATION CHECKLIST

- ☐ **Clearance** — Inflate the air springs to 75-90 PSI and make sure there is at least 1/2" clearance from anything that might rub against the air spring. This should be checked with the air spring fully inflated and fully deflated.

- ☐ **Leak** — Inflate the air springs to 75-90 PSI and check all connections for leaks. All leaks must be eliminated before the vehicle is road tested.

- ☐ **Heat** — Be sure there is sufficient clearance from heat sources, at least 6" for air springs and air lines. If a heat shield was included in the kit, install it. If there is no heat shield, but one is required, call Air Lift customer service at **(800) 248-0892**.

- ☐ **Fastener** — Recheck all bolts for proper torque.

- ☐ **Road** — Inflate the springs to recommended driving pressures. Drive the vehicle 10 miles and recheck for clearance, loose fasteners and air leaks.

- ☐ **Operating instructions** — If professionally installed, the installer should review the operating instructions with the owner. Be sure to provide the owner with all paperwork that came with the kit.

POST-INSTALLATION CHECKLIST

- ☐ **Overnight leak down test** — Recheck air pressure 24 hours after installation and driving of the vehicle. If the pressure has dropped more than 5 PSI, there is a leak that must be fixed.

- ☐ **Air pressure requirements** — It is important to understand the air pressure requirements of the air spring system. Regardless of load, the air pressure should always be adjusted to maintain adequate ride height at all times while driving.

- ☐ **Thirty-day or 500-mile test** —Recheck the air spring system after 30 days or 500 miles, whichever comes first. If any part shows signs of rubbing or abrasion, the source should be identified and moved, if possible. If it is not possible to relocate the cause of the abrasion, the air spring may need to be remounted. If professionally installed, the installer should be consulted. Check all fasteners for tightness.

Use, Maintenance and Servicing

1. An Air Lift air management system is strongly recommended for this product, but it is possible to operate without one. The air lines can be routed to Schrader valves for use with a separate air compressor. Air lines and Schrader valves are not included with Air Lift Performance kits and would need to be purchased separately. To learn more about Air Lift management systems visit **air-lift.co/productlines**.
2. Check the air pressure before driving.

⚠ WARNING

BEFORE SERVICING THE VEHICLE, MAKE SURE TO TURN OFF “RISE ON START” AND “PRESET MAINTAIN.” THIS WILL ELIMINATE ANY UNINTENDED SUSPENSION CYCLING IF YOU NEED TO TURN THE KEY ON IN THE VEHICLE FOR ANY REASON.

TUNING THE AIR PRESSURE.

Pressure determination comes down to three things — level vehicle, ride comfort and stability.

1. **Level vehicle**

   Depending on load, it is possible one side will need more pressure than the other to level the vehicle.

2. **Ride comfort**

   If the vehicle has a harsh ride, it may be due to either too much pressure or not enough causing frequent bottoming. Also, riding the vehicle at the top, or close to the top of the available stroke will cause an uncomfortable ride due to a lack of rebound travel. This situation should be avoided for driving any significant distance. Try different pressures to determine the best ride comfort. See the Air Lift suggested driving air pressure for this vehicle (Table 2).

3. **Stability**

   Stability translates into safety and should be the priority, meaning the driver may need to sacrifice a perfectly level and comfortable ride. Stability issues include roll control, bounce, dive during braking and sponginess. Tuning out these problems usually requires additional air pressure, damping or both.

Troubleshooting Guide

PROBLEM	CAUSE	SOLUTION
Air spring won't maintain pressure.	Leak at fitting, air line not cut properly or damage to air line during installation.	Find location of leak by spraying listed components with soapy water solution and look for bubbles. Tighten air fitting, re-cut air line or replace damaged components.
	Leak at lower O-ring on damper if air spring is over the damper.	Spray bottom of air spring with soapy water solution and look for bubbles. Contact Air Lift customer service at **(800) 248-0892** to determine if component should be replaced.
Knocking noise when hitting bumps.	Loose suspension component such as locking collar on damper.	Tighten lower locking collar with significant force, check and tighten suspension components to factory specs at desired ride height.
	Driving vehicle too close to maximum extension.	Check current ride height and compare to maximum height. If there is less than 1" (25mm) difference, reduce air pressure to lower ride height.
		Lengthen strut or shock to increase available up travel.
Suspension bottoms out.	Air pressure is too low, causing air springs to bottom out.	Raise air pressure.
The ride is too bouncy.	Air pressure is too high, causing air springs to be too stiff.	Lower air pressure and adjust damper length if necessary to achieve proper ride height.
	Damping is inadequate.	Increase damping with adjusters.
The ride is too soft or floaty.	Damping is inadequate.	
The ride is too harsh.	Excessive damping.	Reduce damping with adjusters.

TIPS FOR INSTALLING AIR LINES

When cutting air lines, use a sharp knife or a hose cutter and make clean, square cuts (Fig. 13). Do not use scissors or wire cutters because these tools will deform the air line, causing it to leak around fittings. Do not cut the lines at an angle.

Do not bend the 1/4” hose at a radius of less than 1” and do not put side load pressure on fitting. The hose should be straight beyond the fitting for 1” before bending.

Inspect hose for scratches that run lengthwise on hose prior to installation. Contact Air Lift customer service at **(800) 248-0892** if the air line is damaged.

To watch a video demonstrating proper air line cutting, go to air-lift.co/cuttingairline

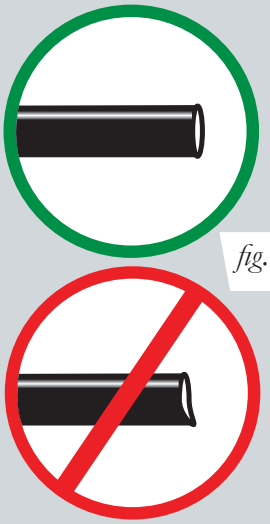

fig. 13

CHECKING FOR LEAKS

1. Inflate the air spring to at least 80 PSI.
2. Spray all connections with a solution of 1/5 liquid dish soap and 4/5 water. Spot leaks easily by looking for bubbles in the soapy water.
4. Check the air pressure again after 24 hours. A 2-4 PSI loss after initial installation is normal. Retest for leaks if the loss is more than 5 PSI.

FIXING LEAKS

1. **Air line to PTC fitting**: Try pushing the air line firmly into the fitting to ensure it is properly seated. If leak persists, deflate the spring and remove the air line by pushing the collar toward the fitting body and pulling firmly on the air line. Trim 1” off the end of the air line making sure the cut is clean and square. Reinsert air line firmly into fitting and pull back on the air line to make sure it is seated.
2. **Threaded connection**: If possible, tighten the fitting another half turn. If the leak persists, deflate spring, remove fitting and re-coat threads with thread sealant. Reinstall to hand tight and then use wrench to finish tightening an additional 1 3/4 turns.
3. **Air spring O-ring seal**: If a leak is found at the upper or lower air spring seal on a strut or shock, contact Air Lift customer service at **(800) 248-0892.**

Notes

Notes

Notes

Limited Warranty and Return Policy

Air Lift Company provides a 1-year limited warranty to the original purchaser of Air Lift Performance damper kits from the date of original purchase, that the products will be free from defects in workmanship and materials when used on vehicles as specified by Air Lift Company and under normal operating conditions, subject to the requirements and exclusions set forth in the full Limited Warranty and Return Policy that is available online at **www.airliftperformance.com/warranty**.

For additional warranty information contact Air Lift Company customer service.

Replacement Part Information

If replacement parts are needed, call Air Lift customer service. Most parts are immediately available and can be shipped the same day.

Contact Air Lift Company customer service at (800) 248-0892 first if:

- Parts are missing from the kit.
- Need technical assistance on installation or operation.
- Broken or defective parts in the kit.
- Wrong parts in the kit.
- Have a warranty claim or question.

Contact the retailer where the kit was purchased:

- If it is necessary to return or exchange the kit for any reason.
- If there is a problem with shipping if shipped from the retailer.
- If there is a problem with the price.

Contact Information

Mailing address	P.O. Box 80167 Lansing, MI 48908-0167
Shipping address for returns	2727 Snow Road Lansing, MI 48917
Phone	Toll free: (800) 248-0892 International: (517) 322-2144
Email	service@airliftcompany.com
Web address	www.airliftcompany.com

Air Lift Company reserves the right to make changes and improvements to its products and publications at any time. For the latest version of this manual, contact Air Lift Company at **(800) 248-0892** or visit **www.airliftperformance.com**.

Need Help?

Contact Air Lift Company customer service department by calling (800) 248-0892. For calls from outside the USA or Canada, dial (517) 322-2144.

Connect by searching for **Air Lift Performance** *#LifeonAir*

Thank you for purchasing Air Lift Performance products!

Air Lift Performance • 2727 Snow Road • Lansing, MI 48917 or P.O. Box 80167 • Lansing, MI 48908-0167
Toll Free (800) 248-0892 • Local (517) 322-2144 • Fax (517) 322-0240 • www.airliftperformance.com

Printed in the USA
JJC-1116

Kit 75676

Volkswagen MKV & MKVI Platform

Independent Rear Application

INSTALLATION GUIDE

For maximum effectiveness and safety, please read these instructions completely before proceeding with installation.

Failure to read these instructions can result in an incorrect installation.

MN-869 • (011301) • ERN 7470

TABLE OF CONTENTS

Introduction 2
Notation Explanation 2

Important Safety Notices 2

Installation Diagram 3
Hardware List 3

Installing the Air Suspension 4
Preparing the Vehicle. 4
Installing the Rear shock 4
Routing Air Lines 8

Tips for Installing the Air Lines 9
Cutting Air Lines 9
Push-to-Connect (PTC) Fittings 9
Checking for Leaks 9
Fixing Leaks 9

Before Operating 10
Setting the Ride Height 10
Torque Specifications 10
Suggested Driving Air Pressure and Maximum Air Pressure 10
Check for Binding 11
Damping Adjustment. 11
Aligning the Vehicle 11
Adjusting Extended or Drop Height Using Lower Mount 12
Installation Checklist 13
Post-installation Checklist. 13

Use, Maintenance and Servicing 14
Tuning the Air Pressure 14
Troubleshooting Guide 14

Limited Warranty and Return Policy 17

Replacement Part Information 17

Contact Information 17

Introduction

Air Lift Performance thanks you for purchasing the most complete, fully engineered high-performance air suspension made for the Volkswagen MKV & MKVI. Read these installation instructions to correctly and safely set up the vehicle for a #lifeonair.

Air Lift assumes that the installer has the mechanical knowledge and ability to work on vehicle suspension systems and has basic tools necessary to complete the project. Special tools needed to complete the installation are noted on the Installation Diagram page.

Air Lift reserves the right to make changes and improvements to its products and publications at any time. For the latest version of this manual, contact Air Lift Performance at **(800) 248-0892** or visit **www.airliftperformance.com**.

An Air Lift Performance air management system is highly recommended for this product. Learn more at **air-lift.co/productlines**.

NOTATION EXPLANATION

Hazard notations appear in various locations in this publication. Information which is highlighted by one of these notations must be observed to help minimize risk of personal injury or possible improper installation which may render the vehicle unsafe. Notes are used to help emphasize areas of procedural importance and provide helpful suggestions. The following definitions explain the use of these notations as they appear throughout this guide.

DANGER — INDICATES IMMEDIATE HAZARDS WHICH WILL RESULT IN SEVERE PERSONAL INJURY OR DEATH.

WARNING — INDICATES HAZARDS OR UNSAFE PRACTICES WHICH COULD RESULT IN SEVERE PERSONAL INJURY OR DEATH.

CAUTION — INDICATES HAZARDS OR UNSAFE PRACTICES WHICH COULD RESULT IN DAMAGE TO THE MACHINE OR MINOR PERSONAL INJURY.

NOTE — *Indicates a procedure, practice or hint which is important to highlight.*

Important Safety Notices

WARNING — DO NOT INFLATE AIR SPRINGS WHILE OFF OF THE VEHICLE. DAMAGE TO ASSEMBLY MAY RESULT AND VOID WARRANTY.

CAUTION — DO NOT WELD TO OR MODIFY PERFORMANCE STRUTS/SHOCKS IN ANY WAY. DAMAGE TO UNIT MAY OCCUR AND WILL VOID WARRANTY.

Installation Diagram

HARDWARE LIST

Item	Part #	Description	Qty
A	18585	3/8”-16 Nutsert	2
B	18436	3/8”-16 Nut	4
C	17463	3/8”-16 X 2.0” Threaded Rod	2
D	17447	3/8”-16 X 1.25” Threaded Rod	2
E	58531	Air Spring 2B6 Regular (Recess Mount)	2
F	21779	1/4” MNPT X 1/4” PTC Elbow (DOT)	2
G	21851	1/4” MNPT X 3/8” PTC 90° (DOT)	2
H	11801	Roll Plate	2
I	03992	Lower Bracket, MKV Rear	2
J	18427	3/8” Lock Washer	4
K	17101	3/8”-16 X 3/4” Hex Bolt	4
L	13980	Spring Seat Centering Spacer	2
M	17109	3/8”-16 X 3.5” Hex Cap Screw	2
N	17442	3/8”-16 X 3.0” Hex Cap Screw	2
O	26981	Shock, MKV/VI Rear Threaded Body	2

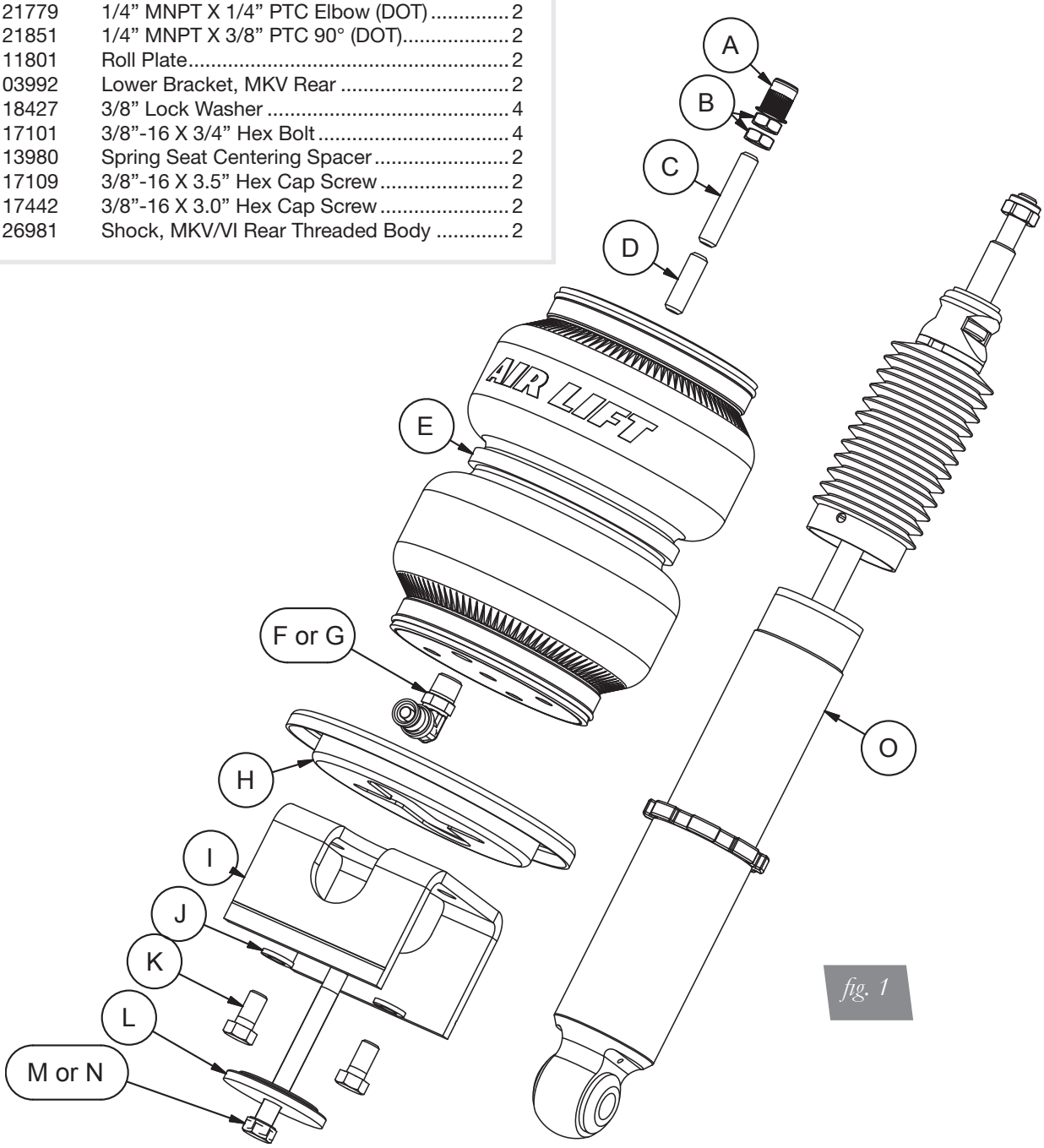

fig. 1

STOP! Missing or damaged parts? Call Air Lift customer service at (800) 248-0892 for a replacement part.

Installing the Air Suspension

PREPARING THE VEHICLE

1. Elevate the vehicle and support the body with a hoist or jack stands.
2. Remove the rear wheels.

NOTE *If the vehicle is equipped with automatic vertical headlight control, disconnect the coupling rod from the lower transverse link (Fig. 2).*

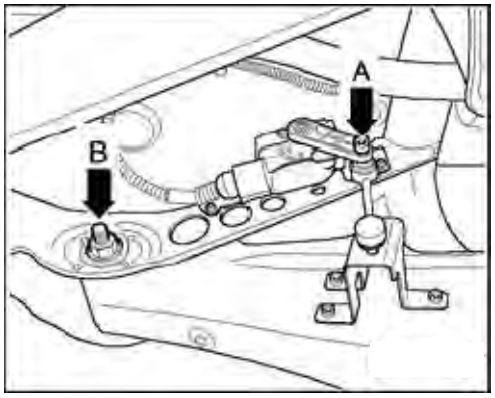

fig. 2

3. To remove the coil spring, it is recommended that you use a spring compressor.

CAUTION COIL SPRING UNDER COMPRESSION: THE COIL SPRING CAN BE REMOVED BY SECURELY SUPPORTING THE LOWER TRANSVERSE LINK WITH A JACK AND REMOVING THE LOWER MOUNTING BOLT FROM THE WHEEL BEARING HOUSING. SLOWLY LOWER THE TRANSVERSE LINK UNTIL THE SPRING IS LOOSE AND FREE FROM TENSION.

4. Remove the rubber isolator in the lower transverse link.
5. Disconnect the lower transverse link from the hub.
6. Support the axle carrier and remove the lower shock mount.
7. Unbolt the upper shock bracket and remove the shock from the vehicle.
8. Remove the upper bracket plastic cap and remove the nut shock rod nut. Retain the upper shock bracket and plastic cap for later use.

INSTALLING THE REAR SHOCK

1. The rear shocks supplied in this kit are height adjustable through the use of the threaded lower mount. The shocks are threaded all the way down for maximum drop height. To adjust the height, loosen the locking collar and thread the shock cartridge in or out of the lower mount. Lock the shock cartridge in-place by torqueing the collar against the lower mount 45 degrees beyond hand tight.
   a. Thread the out to 300mm to match the compressed height of Bilstein Sport shocks (Fig. 3).

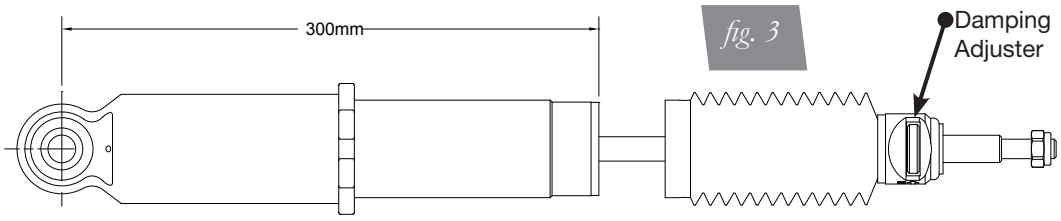

fig. 3

2. Attach the factory upper shock mount to the shock using the supplied nut and torque to 25NM (18 lb.-ft.).
3. Reattach the shock upper bracket to the chassis and toque bolts to 45Nm (33 lb.-ft.).
4. Align the lower shock eye with the axle carrier and reinstall the lower shock bolt. Do not torque at this time.
5. Use a 17/32” drill bit to enlarge the hole in the upper coil spring perch. If the upper coil spring perch has been removed, drill in the center of where the perch used to be.
6. The hole must be 17/32” for the nutsert to be effective (Figs. 3-6).

Factory / OEM Upper Spring Perch

fig. 4

fig. 5

Previously Cut Spring Perch with Aftermarket Shock

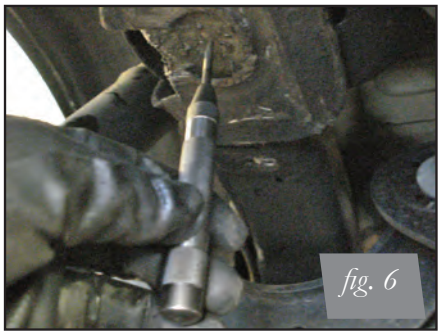
fig. 6

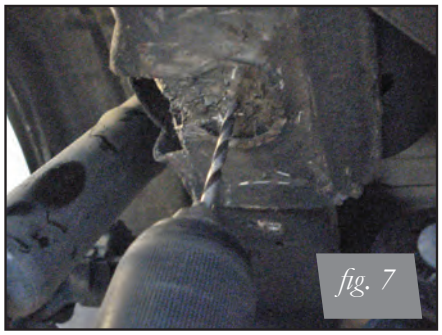
fig. 7

7. Assemble the nutsert and nutsert tool together and insert into the 17/32” hole. Review diagram below on how to attach the nutsert to the vehicle. (Fig. 8).

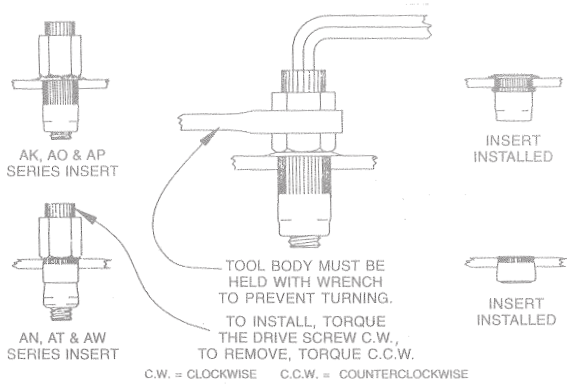

fig. 8

8. Two lengths of threaded studs are included with the kit (C or D, Fig. 1). The shorter stud is for vehicles that retain the coil spring perch bump. The longer threaded stud is for vehicles without the spring perch bump. Apply Loctite to the threads of the upper end cap and thread in the appropriate stud. Take the supplied nuts and thread both onto one stud (Fig. 9, 10). Using the nuts jammed together, tighten the stud into the end cap until it bottoms (Fig. 11). Remove both nuts (Fig. 12).

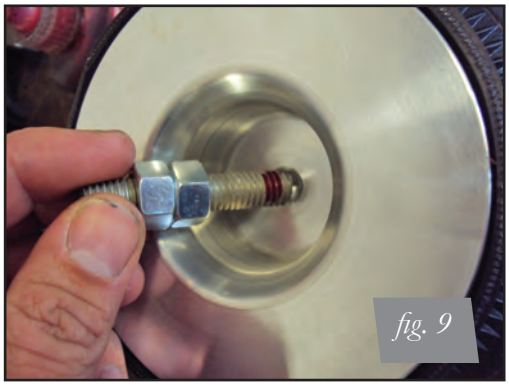
fig. 9

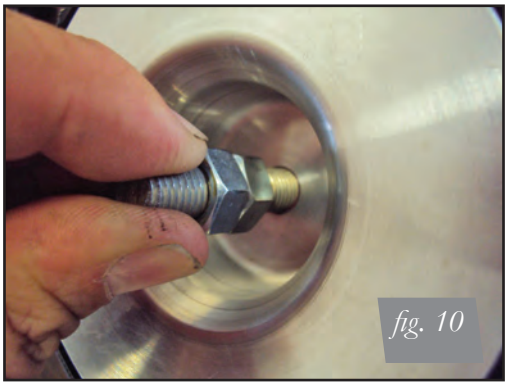
fig. 10

fig. 11

fig. 12

9. Wrap the threads of the fitting with Teflon tape or thread sealant. Tighten the fitting 1 3/4 turns beyond hand tight.
10. Thread the air spring into the lower end cap of the air spring. Tighten by hand (Figs. 13 & 14).

Previously Cut Spring Perch with Aftermarket Shock

fig. 13

fig. 14

11. Orient the air fitting inline with lower transverse link toward the center of the vehicle.
12. The lower bracket in this kit has a scribe line. This indicates the height the bracket should be if using Air Lift rear shocks or shocks that allow for more drop than the factory shock absorbers with half cut jounce bumpers.

⚠ CAUTION

IF RUNNING A SHORTER-THAN-FACTORY SHOCK, THE BRACKET MUST BE TRIMMED DOWN TO PREVENT THE AIR SPRING FROM BEING OVER COMPRESSED AND POTENTIALLY CAUSING A RUPTURE.

13. Attach the lower bracket and roll plate with the lock washer and bolts provided. The roll plate is used with the full length lower bracket. Roll plates are not used with a cut bracket.

Installation with factory shock, roll plate and un-cut lower bracket (Figs. 15, 16, 17)

fig. 15

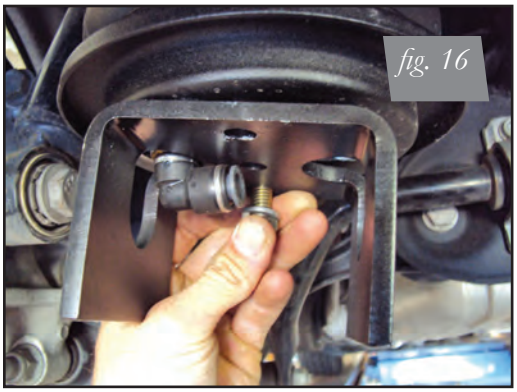
fig. 16

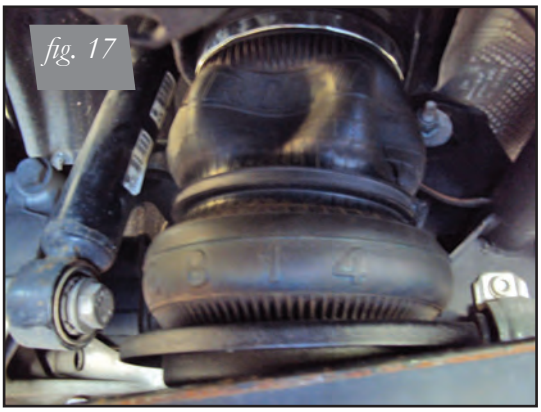
fig. 17

Installation with aftermarket shock, no roll plate and cut bracket (Figs. 18-21)

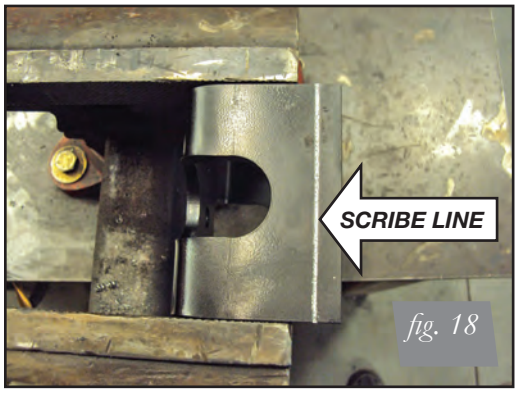

fig. 18

fig. 19

fig. 20

fig. 21

14. Route the air line from the center of the cross-member, through the lower transverse link and attach insert into the air fitting (Fig. 22).

fig. 22

15. Reattach the lower transverse link to the hub. Do not torque at this time (Fig. 23).

NOTE

If the lower bracket has been cut, the shorter length bolt should be used to secure the assembly to the lower transverse link with the centering washer and lock washer. Uncut brackets use the longer bolt (C or D, Fig. 1) (Fig. 24).

fig. 23

fig. 24

ROUTING THE AIR LINES

1. Fully compress the suspension using a jack. With the suspension compressed, review the best routing for the leader line that is clear of all suspension components and axle.
2. Routing should also allow for the suspension to extend without kinking or pulling the line tight or rubbing on other components. Following the brake line routing is often a good place to start. Check clearances to all other components.

Tips for Installing the Air Lines

CUTTING AIR LINES

When cutting air lines, use a sharp knife or a hose cutter and make clean, square cuts (Fig. 25). Do not use scissors or wire cutters because these tools will deform the air line, causing it to leak around fittings. Do not cut the lines at an angle.

The minimum bend radius for 1/4" air line is 1". The minimum bend radius for 3/8" air line is 1.5". Do not bend the air line less than the minimum bend radius or side load the fitting connections. Air lines are to be installed straight into fittings.

Inspect the air line for scratches that run lengthwise prior to installation. Contact Air Lift customer service at **(800) 248-0892** if the air line is damaged.

To watch a video demonstrating proper air line cutting, go to air-lift.co/cuttingairline

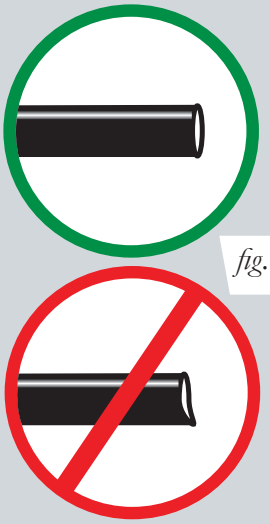

fig. 25

PUSH-TO-CONNECT (PTC) FITTINGS

Air lines should be pushed into the push-to-connect fittings firmly, with a slight side-to-side rotational twist. Check the connection by pulling on each line to verify a robust connection.

NOTE

To release the air line from the connection (Fig. 26), first release all air from the system. Push in on the air line (step 1), push the collar in (step 2), and with the collar depressed, pull the air line out of the fitting (step 3).

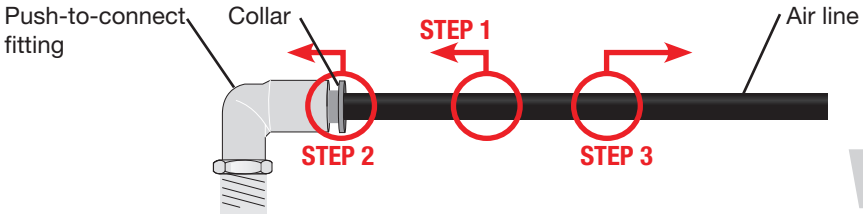

fig. 26

CHECKING FOR LEAKS

1. Inflate the air spring to 75-90 PSI.
2. Spray all connections with a solution of 1/5 liquid dish soap and 4/5 water. Spot leaks easily by looking for bubbles in the soapy water.
3. After the test, deflate the springs to the minimum pressure required to restore the system to normal ride height.
4. Check the air pressure again after 24 hours. A 2-4 PSI loss after initial installation is normal. Retest for leaks if the loss is more than 5 PSI.

FIXING LEAKS

1. If there is a problem with the push-to-connect fitting, remove the air line as described above. Trim 1” off the end of the air line. Be sure the cut is clean and square (see Fig. 25).
2. Reinsert the air line into the push-to-connect fitting as described above.

Before Operating

SETTING THE RIDE HEIGHT

1. With the suspension fully compressed, take a measurement from the fender to a chosen reference point – typically the center of the axle. Record this measurement as max compression (MC).
2. Cycle the suspension to max extension (ME) and record the measurement from the fender to the same reference point.
3. Add ME and MC, then divide the total by 2. Set the suspension to this point. This position will give 50% stroke in either direction and is a starting point for ride height (Fig. 27).

Formula for Calculating Ride Height
(ME+MC)÷2=MID STROKE

fig. 27

4. With the suspension at this position, loosen, then re-torque all suspension bushing pivot joint fasteners to the manufacturer's specifications (Table 1):

Torque Specifications		
Location	Nm	Lb.-ft.
Upper bracket to chassis	64	47
Upper shock mount cap	25	18
Axle carrier to shock eye	70	52
Axle carrier to upper control arm ball joint	70	52
Camber adjustment bolt	50	37°
Upper control arm to subframe	90	67
Rear suspension arm to subframe	90	67
Headlight alignment link	5.4	48 lb.-in.
Wheels	103	76

Table 1

Suggested Driving Air Pressure	Maximum Air Pressure
40-70 PSI	**125 PSI**
FAILURE TO MAINTAIN ADEQUATE MINIMUM PRESSURE (OR PRESSURE PROPORTIONAL TO LOAD) MAY RESULT IN EXCESSIVE BOTTOMING OUT AND **WILL VOID THE WARRANTY**.	

Table 2

CHECK FOR BINDING

1. Inflate and deflate the system (do not exceed 125 PSI) to check for clearance or binding issues. With the air springs deflated, check clearances on everything so as not to pinch brake lines, vent tubes, etc. Clear lines if necessary.
2. Inflate the air springs to 75-90 PSI and check all connections for leaks.

CAUTION MAKE SURE THE FRONT WHEELS ARE STRAIGHT WHEN DEFLATING AND REINFLATING AIR BAGS.

DAMPING ADJUSTMENT

Suspension damping is a matter of compromise. Setting it too stiff will make the ride feel jarring. In addition, if the suspension is too stiff, the tires will lose contact with the road, reducing control and power delivery. On the other hand, if the suspension is too soft, the car can experience brake dive and excessive bouncing. The sweet spot lies somewhere in the middle. Air Lift dampers have a range of adjustment, which allows the driver to tune the ride and handling to his or her preferences.

Air Lift recommends damper and air pressure settings for every vehicle kit, but it is impossible to consider every situation. For example, even though Air Lift kits replace the dampers and springs, vehicles with sport-tuned suspensions might have stiffer bushings, larger anti-roll bars, bigger wheels, wider tires, etc. These settings may need to be adjusted to different vehicles and driving characteristics.

1. The dampers in this kit have 30 settings, or “clicks,” of adjustable compression and rebound damping characteristics. Damping is changed through the adjuster at the top of the shock rod (Fig. 28).
2. Turn the adjuster clockwise (H) and the damping settings are hardened, reducing oscillations and body motion. Turn the adjuster counterclockwise (S) and the damping is softened.
3. Each damper in this kit is preset to “-15 clicks.” This means that the damper is adjusted 15 clicks away from full stiff, which starts at 0. Counting up from full stiff is the preferred method of keeping track of, or setting, damping. This setting was developed on a 2008 Volkswagen Jetta.

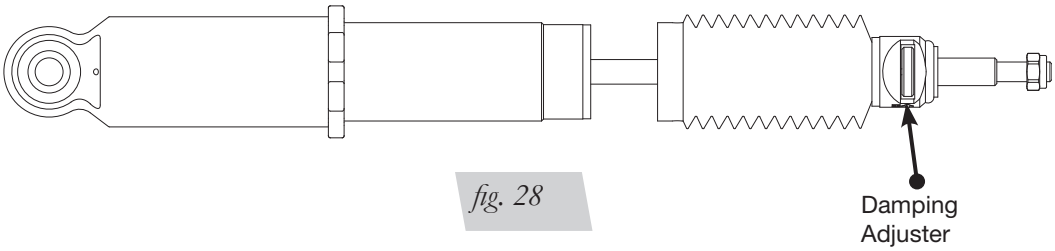

fig. 28

ALIGNING THE VEHICLE

1. Set the vehicle to the height at which it will most often be driven.
2. If the ride height is lower than stock, Air Lift Performance recommends loosening all pivot points (bolts, nuts) on any control arm, strut arm or radius rod that contains bushings. Once they have been loosened, re-torque to stock specifications (Table 1).

NOTE *It may be necessary to cycle the suspension to loosen the bushing from its mount. This will help re-orient the bushing at its new position based on the chosen ride height.*

3. Get a shop alignment of the vehicle at the new chosen ride height.

ADJUSTING EXTENDED OR DROP HEIGHT USING LOWER MOUNT

These dampers have been pre-set at the factory to provide maximum drop height while maintaining adequate tire clearance to the air spring. If you wish to gain more extended height (lift), which is the same as reducing drop height, or want to lower the chassis further and there is still adjustment available at the lower mount, please use the following procedure:

1. Support the vehicle with jack stands or a hoist at approved lifting points.
2. Remove the wheel.
3. Using the supplied spanner wrench, loosen the locking collar (Fig. 29).
4. Deflate the air spring to 0 PSI on the corner you are adjusting.
5. Disconnect lower mount from suspension.
6. Spin the lower mount to the desired location.

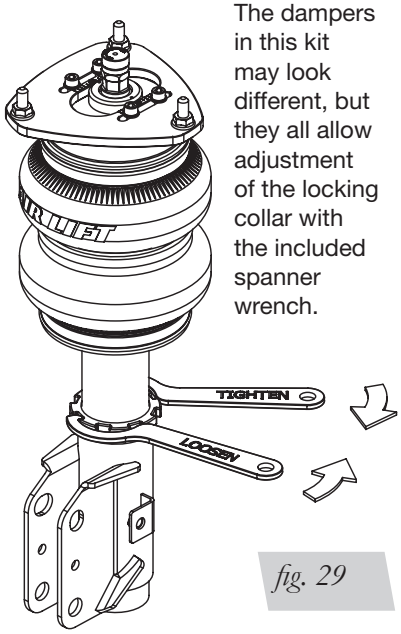

The dampers in this kit may look different, but they all allow adjustment of the locking collar with the included spanner wrench.

fig. 29

NOTE

Not all vehicles will have further drop height available.

7. Re-install lower mount to suspension and torque fasteners.
8. Tighten the lower locking collar to the lower mount using significant force.

⚠ CAUTION

WHEN ADJUSTING HEIGHT UPWARD, MAKE SURE THAT THE DAMPER BODY ENGAGES ALL THE THREADS OF THE LOWER MOUNT (FIG. 30). WHEN ADJUSTING DOWNWARD, MAKE SURE THERE IS ADEQUATE AIR SPRING CLEARANCE TO THE TIRE/WHEEL ASSEMBLY. CLEARANCE MUST BE CHECKED WITH SYSTEM FULLY DEFLATED AS WELL AS FULLY INFLATED TO ENSURE THAT NO RUBBING OCCURS. FAILURE TO MAINTAIN ADEQUATE CLEARANCE CAN RESULT IN AIR SPRING FAILURE AND WILL NOT BE COVERED UNDER WARRANTY.

⚠ CAUTION

DO NOT ADJUST HEIGHT BY SPINNING AIR SPRING ON DAMPER! DOING SO MAY CAUSE AN AIR LEAK AND COMPROMISE THE ASSEMBLY.

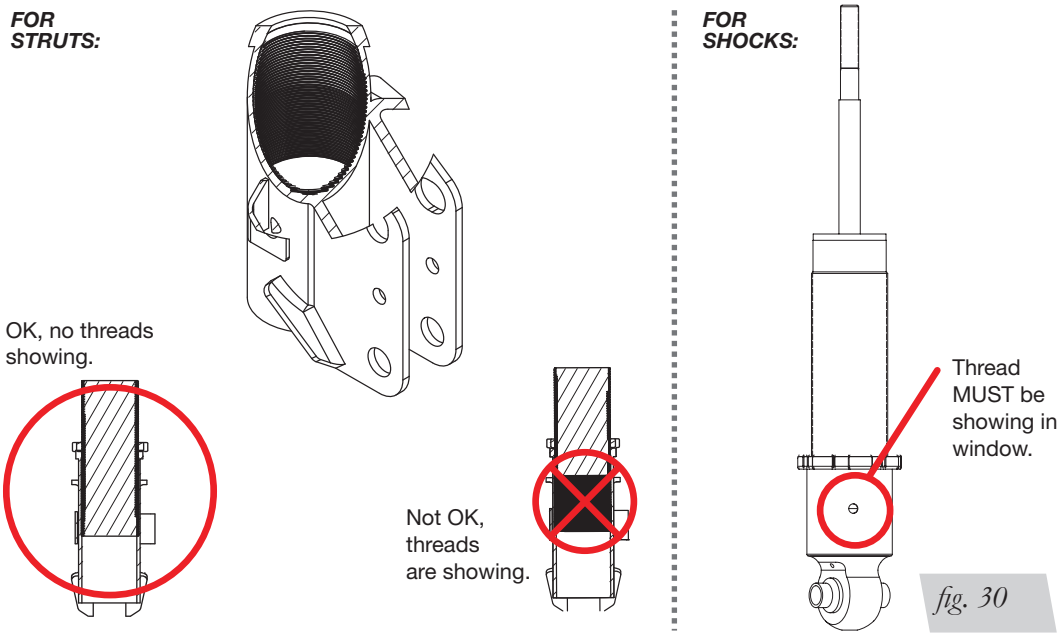

fig. 30

INSTALLATION CHECKLIST

- ☐ **Clearance** — Inflate the air springs to 75-90 PSI and make sure there is at least 1/2" clearance from anything that might rub against the air spring. This should be checked with the air spring fully inflated and fully deflated.

- ☐ **Leak** — Inflate the air springs to 75-90 PSI and check all connections for leaks. All leaks must be eliminated before the vehicle is road tested.

- ☐ **Heat** — Be sure there is sufficient clearance from heat sources, at least 6" for air springs and air lines. If a heat shield was included in the kit, install it. If there is no heat shield, but one is required, call Air Lift customer service at **(800) 248-0892**.

- ☐ **Fastener** — Recheck all bolts for proper torque.

- ☐ **Road** — Inflate the springs to recommended driving pressures (Table 2). Drive the vehicle 10 miles and recheck for clearance, loose fasteners and air leaks.

- ☐ **Operating instructions** — If professionally installed, the installer should review the operating instructions with the owner. Be sure to provide the owner with all paperwork that came with the kit.

POST-INSTALLATION CHECKLIST

- ☐ **Overnight leak down test** — Recheck air pressure 24 hours after installation and driving of the vehicle. If the pressure has dropped more than 5 PSI, there is a leak that must be fixed.

- ☐ **Air pressure requirements** — It is important to understand the air pressure requirements of the air spring system. Regardless of load, the air pressure should always be adjusted to maintain adequate ride height at all times while driving.

- ☐ **Thirty-day or 500-mile test** —Recheck the air spring system after 30 days or 500 miles, whichever comes first. If any part shows signs of rubbing or abrasion, the source should be identified and moved, if possible. If it is not possible to relocate the cause of the abrasion, the air spring may need to be remounted. If professionally installed, the installer should be consulted. Check all fasteners for tightness.

Use, Maintenance and Servicing

1. An Air Lift air management system is strongly recommended for this product, but it is possible to operate without one. The air lines can be routed to Schrader valves for use with a separate air compressor. Air lines and Schrader valves are not included with Air Lift Performance kits and would need to be purchased separately. To learn more about Air Lift management systems visit **air-lift.co/productlines**.
2. Check the air pressure before driving.

⚠ WARNING

BEFORE SERVICING THE VEHICLE, MAKE SURE TO TURN OFF “RISE ON START” AND “PRESET MAINTAIN.” THIS WILL ELIMINATE ANY UNINTENDED SUSPENSION CYCLING IF YOU NEED TO TURN THE KEY ON IN THE VEHICLE FOR ANY REASON.

TUNING THE AIR PRESSURE

Pressure determination comes down to three things — level vehicle, ride comfort and stability.

1. **Level vehicle**
   Depending on load, it is possible one side will need more pressure than the other to level the vehicle.
2. **Ride comfort**
   If the vehicle has a harsh ride, it may be due to either too much pressure or not enough causing frequent bottoming out. Also, riding the vehicle at the top, or close to the top of the available stroke will cause an uncomfortable ride due to a lack of rebound travel. This situation should be avoided for driving any significant distance. Try different pressures to determine the best ride comfort. See the Air Lift suggested driving air pressure for this vehicle (Table 2).
3. **Stability**
   Stability translates into safety and should be the priority, meaning the driver may need to sacrifice a perfectly level and comfortable ride. Stability issues include roll control, bounce, dive during braking and sponginess. Tuning out these problems usually requires additional air pressure, damping or both.

TROUBLESHOOTING GUIDE

PROBLEM	CAUSE	SOLUTION
Air spring won't maintain pressure.	Leak at fitting, air line not cut properly or damage to air line during installation.	Find location of leak by spraying listed components with soapy water solution and look for bubbles. Tighten air fitting, re-cut air line or replace damaged components.
	Leak at lower O-ring on damper if air spring is over the damper.	Spray bottom of air spring with soapy water solution and look for bubbles. Contact Air Lift customer service at **(800) 248-0892** to determine if component should be replaced.
Knocking noise when hitting bumps.	Loose suspension component such as locking collar on damper.	Tighten lower locking collar with significant force, check and tighten suspension components to factory specs at desired ride height.
	Driving vehicle too close to maximum extension.	Check current ride height and compare to maximum height. If there is less than 1" (25mm) difference, reduce air pressure to lower ride height.
		Lengthen strut or shock to increase available up travel.
Suspension bottoms out.	Air pressure is too low, causing air springs to bottom out.	Raise air pressure.
The ride is too bouncy.	Air pressure is too high, causing air springs to be too stiff.	Lower air pressure and adjust damper length if necessary to achieve proper ride height.
	Damping is inadequate.	Increase damping with adjusters.
The ride is too soft or floaty.	Damping is inadequate.	
The ride is too harsh.	Excessive damping.	Reduce damping with adjusters.

Notes

Notes

Limited Warranty and Return Policy

Air Lift Company provides a 1-year limited warranty to the original purchaser of Air Lift Performance damper kits from the date of original purchase, that the products will be free from defects in workmanship and materials when used on vehicles as specified by Air Lift Company and under normal operating conditions, subject to the requirements and exclusions set forth in the full Limited Warranty and Return Policy that is available online at **www.airliftperformance.com/warranty**.

For additional warranty information contact Air Lift Company customer service.

Replacement Part Information

If replacement parts are needed, call Air Lift customer service. Most parts are immediately available and can be shipped the same day.

Contact Air Lift Company customer service at (800) 248-0892 first if:

- Parts are missing from the kit.
- Need technical assistance on installation or operation.
- Broken or defective parts in the kit.
- Wrong parts in the kit.
- Have a warranty claim or question.

Contact the retailer where the kit was purchased:

- If it is necessary to return or exchange the kit for any reason.
- If there is a problem with shipping if shipped from the retailer.
- If there is a problem with the price.

Contact Information

Mailing address	P.O. Box 80167 Lansing, MI 48908-0167
Shipping address for returns	2727 Snow Road Lansing, MI 48917
Phone	Toll free: (800) 248-0892 International: (517) 322-2144
Email	service@airliftcompany.com
Web address	www.airliftcompany.com

Air Lift Company reserves the right to make changes and improvements to its products and publications at any time. For the latest version of this manual, contact Air Lift Company at **(800) 248-0892** or visit **www.airliftperformance.com**.

Need Help?

Contact Air Lift Company customer service department by calling (800) 248-0892. For calls from outside the USA or Canada, dial (517) 322-2144.

CONNECT BY SEARCHING FOR **AIR LIFT PERFORMANCE** *#LIFEONAIR*

Thank you for purchasing Air Lift Performance products!

Air Lift Performance • 2727 Snow Road • Lansing, MI 48917 or P.O. Box 80167 • Lansing, MI 48908-0167
Toll Free (800) 248-0892 • Local (517) 322-2144 • Fax (517) 322-0240 • www.airliftperformance.com

Printed in the USA
JJC-0217