AIR LIFT PERFORMANCE®

INSTALLATION GUIDE

78104 shown

Kit 78578/78104

Mercedes W204 4Matic
Mercedes W212 4Matic

FRONT APPLICATION

For maximum effectiveness and safety, please read these instructions completely before proceeding with installation.

Failure to read these instructions can result in an incorrect installation which could result in damage to the vehicle, minor to severe personal injury or death.

Watch the video
Info on Table of Contents page

MN-1097 • (022012) • ERN 9589

TABLE OF CONTENTS

P.02
Introduction

02. Notation Explanation

P.03
System Overview

P.04
Installing the System

04. Important Safety Notices
04. Section 1. Prepare the Vehicle
05. Section 2. Remove the Front Strut
07. Section 3. Install the Air Suspension
09. Section 4. Route the Air Lines
09. Finished Installation

P.10
Before Operating

10. Set the Ride Height
10. Torque Specifications
10. Suggested Driving Air Pressure
10. Maximum Air Pressure
10. Check for Binding
11. Installation Checklist
11. Damping Adjustment

P.12
Limited Warranty and Return Policy

Video-enhanced installation guides

Visit airliftcompany.com/workshop/category/install-videos to access our installation video archive*.

* subject to availability

Introduction

Air Lift Performance thanks you for purchasing the most complete, fully engineered high-performance air suspension made for the Mercedes W204/W212 4Matic. Read these installation instructions to correctly and safely set up the vehicle for a #lifeonair.

Air Lift assumes that the installer has the mechanical knowledge and ability to work on vehicle suspension systems and has basic tools necessary to complete a suspension replacement project. Special tools needed to complete the installation are noted on the *System Overview* page.

Air Lift reserves the right to make changes and improvements to its products and publications at any time. For the latest version of this manual, contact Air Lift Performance at **(800) 248-0892** or visit **www.airliftperformance.com**.

An Air Lift Performance air management system is highly recommended for this product. Learn more at **air-lift.co/productlines**.

NOTATION EXPLANATION

Hazard notations appear in various locations in this publication. Information which is highlighted by one of these notations must be observed to help minimize risk of personal injury or possible improper installation which may render the vehicle unsafe. Notes are used to help emphasize areas of procedural importance and provide helpful suggestions. The following definitions explain the use of these notations as they appear throughout this guide.

DANGER
INDICATES IMMEDIATE HAZARDS WHICH WILL RESULT IN SEVERE PERSONAL INJURY OR DEATH.

WARNING
INDICATES HAZARDS OR UNSAFE PRACTICES WHICH COULD RESULT IN SEVERE PERSONAL INJURY OR DEATH.

CAUTION
INDICATES HAZARDS OR UNSAFE PRACTICES WHICH COULD RESULT IN DAMAGE TO THE VEHICLE OR MINOR PERSONAL INJURY.

NOTE *Used to help emphasize areas of procedural importance and provide helpful suggestions.*

System Overview

THIS KIT REQUIRES THE REMOVAL OF FACTORY TORQUE-TO-YIELD BOLTS. THESE BOLTS ARE DESIGNED TO BE REPLACED AFTER THEY HAVE BEEN LOOSENED. TORQUE-TO-YIELD BOLTS ARE INDICATED IN THE INSTRUCTIONS AND IN THE TORQUE SPECIFICATION CHART.

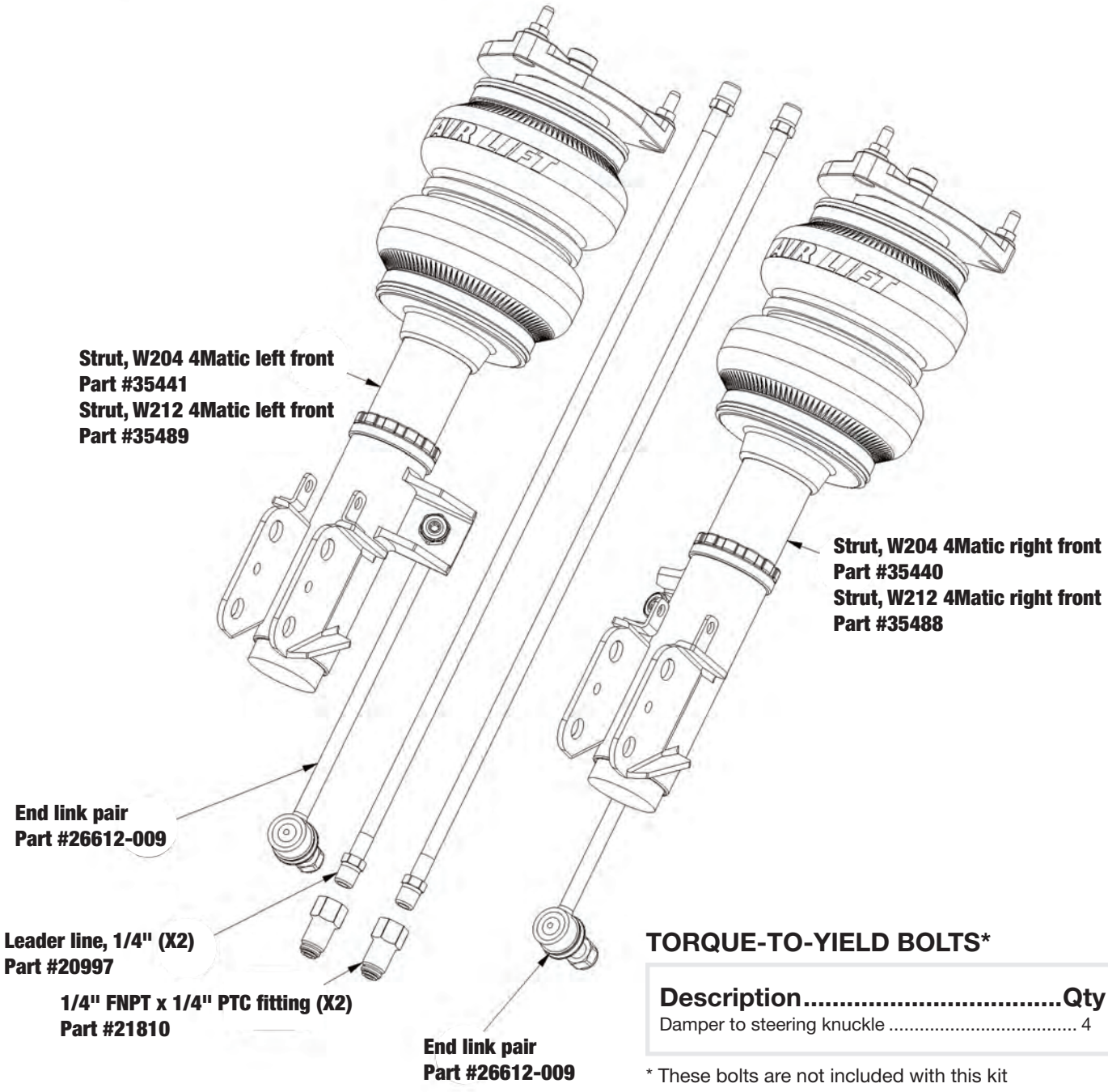

TORQUE-TO-YIELD BOLTS*

Description	Qty
Damper to steering knuckle	4

* These bolts are not included with this kit

STOP! Missing or damaged parts? Call Air Lift customer service at (800) 248-0892 for a replacement part.

Installing the System

IMPORTANT SAFETY NOTICES

DO NOT INFLATE AIR SPRINGS WHILE OFF OF THE VEHICLE. DAMAGE TO ASSEMBLY MAY RESULT AND VOID WARRANTY.

DO NOT WELD TO OR MODIFY PERFORMANCE STRUTS/SHOCKS IN ANY WAY. DAMAGE TO UNIT MAY OCCUR AND WILL VOID WARRANTY.

AFTER INSTALLATION, ENSURE ALL ORIGINAL EQUIPMENT VEHICLE SAFETY FEATURES ARE PROPERLY CALIBRATED BY A QUALIFIED TECHNICIAN. CHANGING VEHICLE HEIGHT MAY AFFECT FUNCTIONING OF SAFETY SENSORS AND CAMERAS.

SECTION 1. PREPARE THE VEHICLE

RAISE THE FRONT OF THE VEHICLE WITH A JACK AT THE APPROVED LIFTING POINTS AND USE SAFETY STANDS TO SUPPORT THE VEHICLE.

1. Elevate and support the vehicle with a hoist or safety stands.
2. Remove the front wheel.

SECTION 2. REMOVE THE FRONT STRUT

1. Disconnect the stabilizer bar linkage from the damper and stabilizer bar.

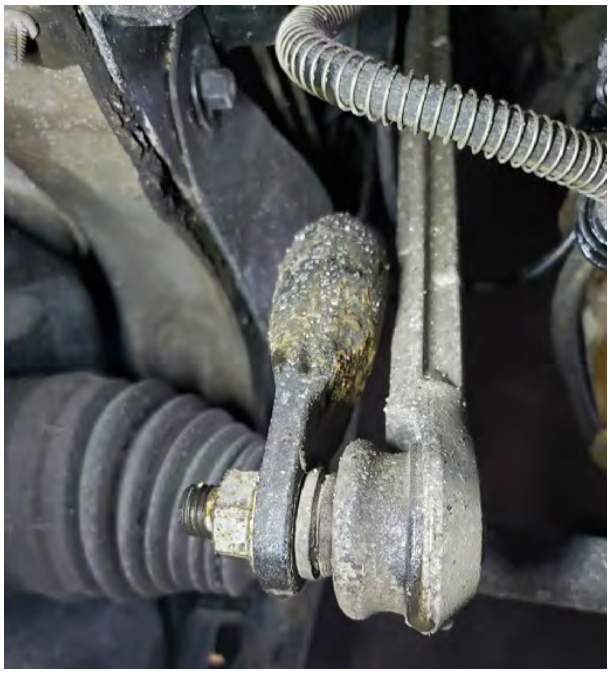

2. Pull the pins holding the brake line bracket and slide the bracket out from behind the mount.

3. Unbolt the damper assembly from the knuckle.

4. Within the engine compartment, remove the three upper mount bolts and push in on to release the two retention clips and remove the damper from the vehicle.

SECTION 3. INSTALL THE AIR SUSPENSION

1. Apply thread sealant to the threads of the leader line. Tighten the 1/4" FNPT x 1/4" PTC fitting to the leader line by 1 3/4 turns beyond hand-tight. Tighten the leader line into the air spring 1 3/4 turns beyond hand-tight.

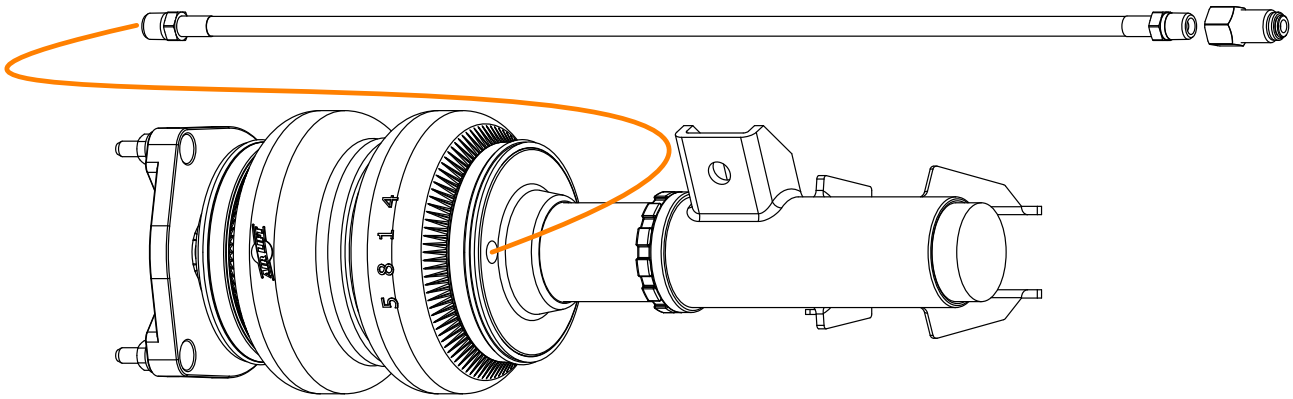

2. Attach the camber plate to chassis (see image at bottom left). Torque nuts to 33Nm (24 lb.-ft.).
3. Attach the damper to the knuckle (see image at bottom right). Torque bolts to 120Nm + 90 degrees (89 lb.-ft. + 90 degrees).

4. Attach the brake line bracket to the joining tabs.

5. Attach the supplied end link to the damper and stabilizer bar. Torque to 98Nm (72 lb.-ft.).

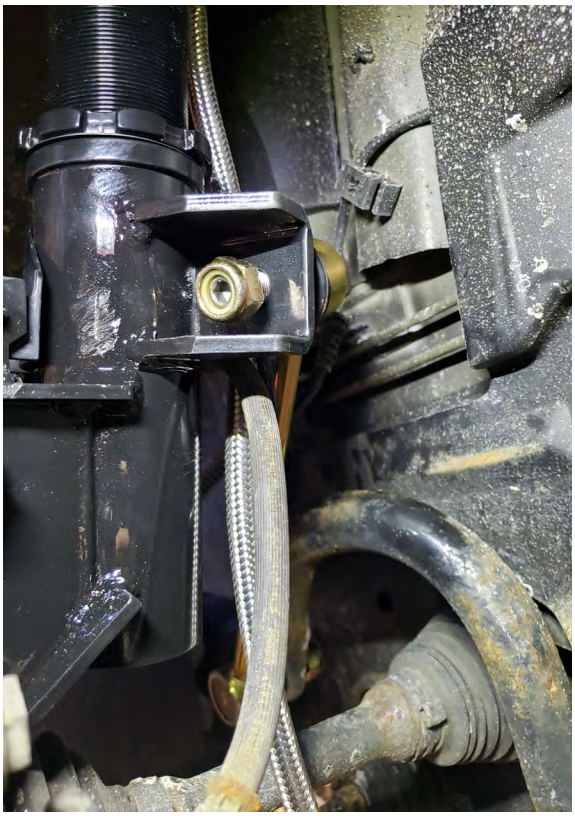

6. Reinstall wheels and torque to 110Nm (81 lb.-ft.).

SECTION 4. ROUTE THE AIR LINES

AFTER INSTALLATION, ENSURE ALL ORIGINAL EQUIPMENT VEHICLE SAFETY FEATURES ARE PROPERLY CALIBRATED BY A QUALIFIED TECHNICIAN. CHANGING VEHICLE HEIGHT MAY AFFECT FUNCTIONING OF SAFETY SENSORS AND CAMERAS.

1. Fully compress the suspension using a jack. With the suspension compressed, review the best routing for the air line that is clear of all suspension and steering components.
2. Routing should allow for the suspension to extend and steer without kinking, pulling the line tight or rubbing on other components. Following the brake line routing is often a good place to start. Check clearances to all other components.

Finished Installation

The image shows the finished installation.

Congratulations!

You are now the proud owner of an industry leading Air Lift Performance air suspension system. Enjoy!

Before Operating

SET THE RIDE HEIGHT

1. Refer to the User Guide supplied with this kit to set up the suspension.

Torque Specifications			
Location	TTY	Nm	lb.-ft.
Camber plate to chassis		33	24
Damper to steering knuckle	✓	120 + 90 degrees	89 + 90 degrees
Stabilizer bar linkage to damper		98	72
Wheel bolts		110	81
Damper locking collar		45 degrees beyond hand-tight	
Leader line and fitting		1 3/4 turns beyond hand-tight with thread sealant	

TORQUE-TO-YIELD BOLTS ARE DESIGNED TO BE REPLACED AFTER THEY HAVE BEEN LOOSENED.

2. Upon successful completion of the installation, follow these pressure requirements for the air springs.

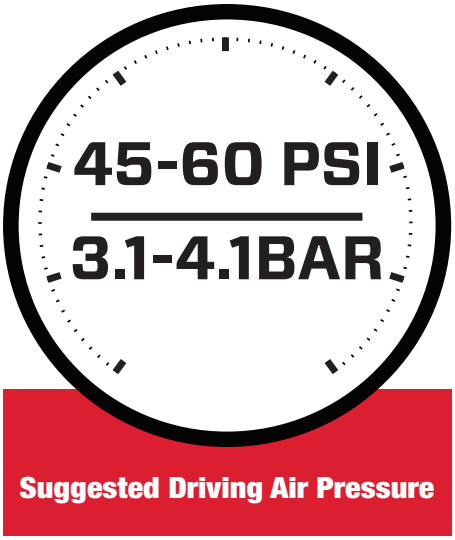

FAILURE TO MAINTAIN ADEQUATE MINIMUM PRESSURE (OR PRESSURE PROPORTIONAL TO LOAD) MAY RESULT IN EXCESSIVE BOTTOMING OUT AND **WILL VOID THE WARRANTY**.

CHECK FOR BINDING

MAKE SURE THE FRONT WHEELS ARE STRAIGHT WHEN DEFLATING AND REINFLATING AIR SPRINGS.

1. Inflate and deflate the system (do not exceed 8.6BAR [125 PSI]) to check for clearance or binding issues. With the air springs deflated, check clearances on everything so as not to pinch brake lines, vent tubes, etc. Clear lines if necessary.

2. Inflate the air springs to 5.2-6.2BAR (75-90 PSI) and check all connections for leaks.

INSTALLATION CHECKLIST

- ☐ **Clearance** — Inflate the air springs to 5.2-6.2BAR (75-90 PSI) and make sure there is at least 13mm (1/2") clearance from anything that might rub against the air spring. This should be checked with the air spring fully inflated and fully deflated.
- ☐ **Leak** — Inflate the air springs to 5.2-6.2BAR (75-90 PSI) and check all connections for leaks. All leaks must be eliminated before the vehicle is road tested.
- ☐ **Heat** — Be sure there is sufficient clearance from heat sources, at least 152mm (6") from air springs and air lines. If a heat shield was included in the kit, install it. If there is no heat shield, but one is required, call Air Lift customer service at **(800) 248-0892**.
- ☐ **Fastener** — Recheck all bolts for proper torque.
- ☐ **Road** — Inflate the air springs to recommended driving pressures (see previous page). Drive the vehicle 16km (10 miles) and recheck for clearance, loose fasteners and air leaks.
- ☐ **Operating instructions** — If professionally installed, the installer should review the operating instructions with the owner. Be sure to provide the owner with all paperwork that came with the kit.

DAMPING ADJUSTMENT

1. The dampers in this kit have 30 settings, or “clicks,” of adjustable compression and rebound damping characteristics. Damping is changed through the damper rod using the supplied adjuster (example shown here) or a 3mm hex key (not included).

2. Turn the adjuster clockwise (H) and the damping settings are hardened, reducing oscillations and body motion. Turn the adjuster counterclockwise (S) and the damping is softened.
3. Each damper in this kit is preset to “-14 clicks.” This means that the damper is adjusted 14 clicks away from full stiff, which starts at 0. Counting up from full stiff is the preferred method of keeping track of, or setting, damping. This setting was developed on a 2010 Mercedes C300 4Matic.

For more information, refer to the User Guide.

Limited Warranty and Return Policy

Air Lift Company provides a 1-year limited warranty to the original purchaser of Air Lift Performance damper kits from the date of original purchase, that the products will be free from defects in workmanship and materials when used on vehicles as specified by Air Lift Company and under normal operating conditions, subject to the requirements and exclusions set forth in the full Limited Warranty and Return Policy that is available online at **www.airliftperformance.com/warranty**.

For additional warranty information contact Air Lift Company customer service.

Thank you for purchasing Air Lift Performance products!

Need Help?

The Air Lift Company customer service department is open from 8 a.m. to 8 p.m. ET Monday through Friday. Call (800) 248-0892 or (517) 322-2144 for calls from outside the U.S. and Canada.

CONNECT BY SEARCHING FOR **AIR LIFT PERFORMANCE** *#LIFEONAIR*

MADE IN USA
WITH GLOBAL
COMPONENTS

2727 Snow Road Lansing, MI 48917 or P.O. Box 80167 Lansing, MI 48908-0167
Toll Free (800) 248-0892 • Local (517) 322-2144 • Fax (517) 322-0240
www.airliftperformance.com

Air Lift Company reserves the right to make changes and improvements to its products and publications at any time.
For the latest version of this manual, contact Air Lift Company at (800) 248-0892 or visit airliftperformance.com.

Printed in the USA
JJC-0121

California: ⚠WARNING: Cancer and Reproductive Harm – www.P65Warnings.ca.gov

AIR LIFT PERFORMANCE®

INSTALLATION GUIDE

Kit 78677

Mercedes W204/W212

REAR APPLICATION

For maximum effectiveness and safety, please read these instructions completely before proceeding with installation.

Failure to read these instructions can result in an incorrect installation which could result in damage to the vehicle, minor to severe personal injury or death.

MN-1098 • (022202) • ECR 9878

Protect your Air Lift Performance Purchase by Completing your Warranty Registration

Thank you for purchasing an Air Lift Performance product!

Take a photo of your sales receipt and then scan the QR code to complete your online warranty registration.

TABLE OF CONTENTS

P.02
Introduction

02. Notation Explanation

P.03
System Overview

P.04
Installing the System

04. Important Safety Notices
04. Section 1. Prepare the Vehicle
05. Section 2. Remove the Rear Coil Spring and Damper
07. Section 3. Install the Air Suspension
10. Section 4. Route the Air Lines
10. Finished Installation

P.11
Before Operating

11. Set the Ride Height
11. Torque Specifications
11. Suggested Driving Air Pressure
11. Maximum Air Pressure
12. Check for Binding
12. Installation Checklist
12. Damping Adjustment

P.13
Limited Warranty and Return Policy

Introduction

Air Lift Performance thanks you for purchasing the most complete, fully engineered high-performance air suspension made for the Mercedes W204/W212. Read these installation instructions to correctly and safely set up the vehicle for a #lifeonair.

Air Lift assumes that the installer has the mechanical knowledge and ability to work on vehicle suspension systems and has basic tools necessary to complete a suspension replacement project. Special tools needed to complete the installation are noted on the *System Overview* page.

Air Lift reserves the right to make changes and improvements to its products and publications at any time. For the latest version of this manual, contact Air Lift Performance at **(800) 248-0892** or visit **www.airliftperformance.com**.

An Air Lift Performance air management system is highly recommended for this product. Learn more at **air-lift.co/productlines**.

NOTATION EXPLANATION

Hazard notations appear in various locations in this publication. Information which is highlighted by one of these notations must be observed to help minimize risk of personal injury or possible improper installation which may render the vehicle unsafe. Notes are used to help emphasize areas of procedural importance and provide helpful suggestions. The following definitions explain the use of these notations as they appear throughout this guide.

DANGER
INDICATES IMMEDIATE HAZARDS WHICH WILL RESULT IN SEVERE PERSONAL INJURY OR DEATH.

WARNING
INDICATES HAZARDS OR UNSAFE PRACTICES WHICH COULD RESULT IN SEVERE PERSONAL INJURY OR DEATH.

CAUTION
INDICATES HAZARDS OR UNSAFE PRACTICES WHICH COULD RESULT IN DAMAGE TO THE VEHICLE OR MINOR PERSONAL INJURY.

NOTE *Used to help emphasize areas of procedural importance and provide helpful suggestions.*

System Overview

THIS KIT REQUIRES THE REMOVAL OF FACTORY TORQUE-TO-YIELD BOLTS. THESE BOLTS ARE DESIGNED TO BE REPLACED AFTER THEY HAVE BEEN LOOSENED. TORQUE-TO-YIELD BOLTS ARE INDICATED IN THE INSTRUCTIONS AND IN THE TORQUE SPECIFICATION CHART.

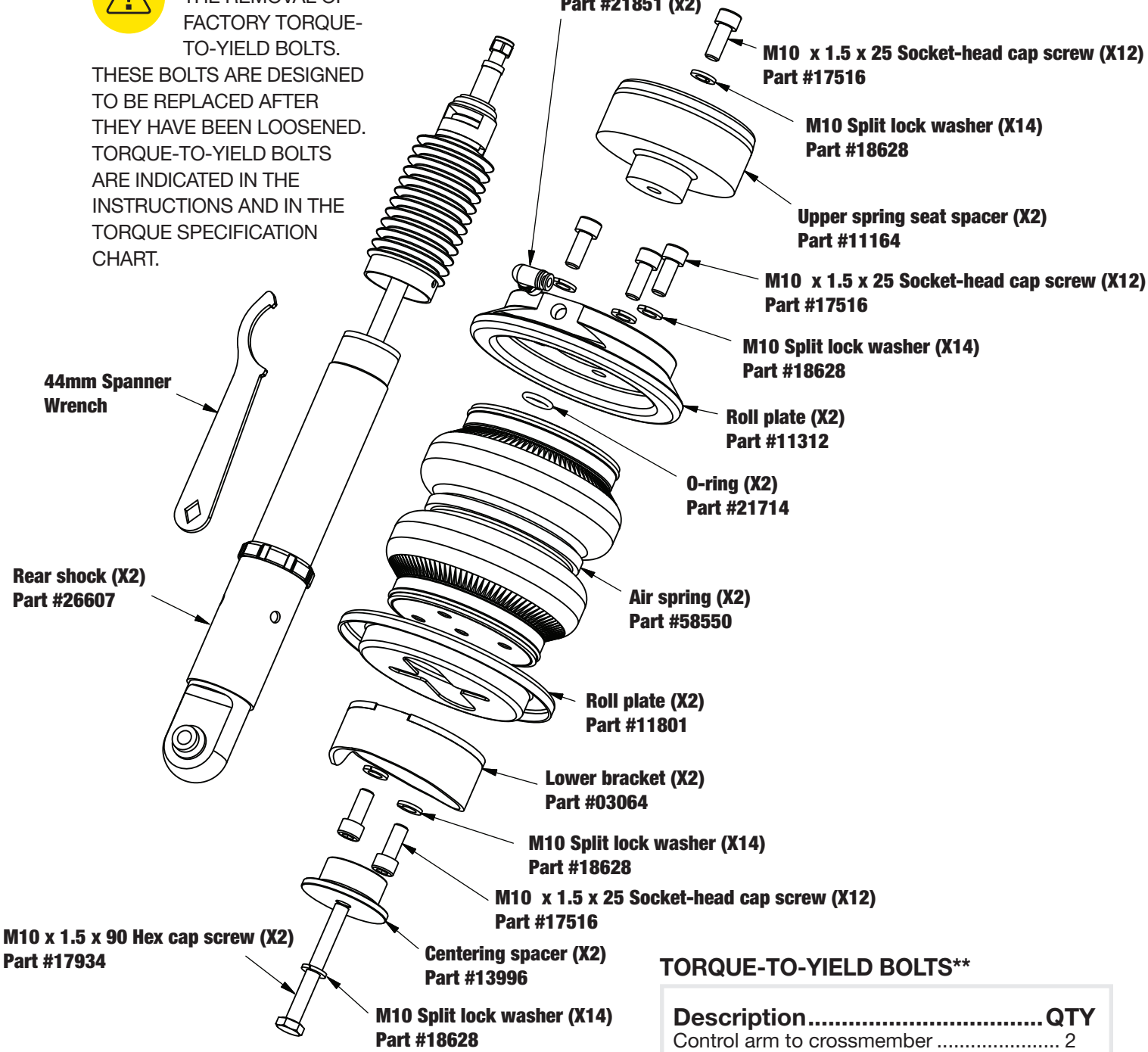

*1/4" MNPT x 3/8" PTC Elbow Fittings (21851) are NOT included in this kit, but are available as a special order.

TORQUE-TO-YIELD BOLTS**

Description	QTY
Control arm to crossmember	2
End link to control arm	2

** These bolts are not included with this kit

STOP! Missing or damaged parts? Call Air Lift customer service at (800) 248-0892 for a replacement part.

Installing the System

IMPORTANT SAFETY NOTICES

DO NOT INFLATE AIR SPRINGS WHILE OFF OF THE VEHICLE. DAMAGE TO ASSEMBLY MAY RESULT AND VOID WARRANTY.

DO NOT WELD TO OR MODIFY PERFORMANCE STRUTS/SHOCKS IN ANY WAY. DAMAGE TO UNIT MAY OCCUR AND WILL VOID WARRANTY.

AFTER INSTALLATION, ENSURE ALL ORIGINAL EQUIPMENT VEHICLE SAFETY FEATURES ARE PROPERLY CALIBRATED BY A QUALIFIED TECHNICIAN. CHANGING VEHICLE HEIGHT MAY AFFECT FUNCTIONING OF SAFETY SENSORS AND CAMERAS.

SECTION 1. PREPARE THE VEHICLE

RAISE THE REAR OF THE VEHICLE WITH A JACK AT THE APPROVED LIFTING POINTS AND USE SAFETY STANDS TO SUPPORT THE VEHICLE.

1. Remove the rear wheels and fender liner.

SECTION 2. REMOVE THE REAR COIL SPRING AND DAMPER

1. To remove the plastic control arm cover, unclip from the four attaching points on the control arm.

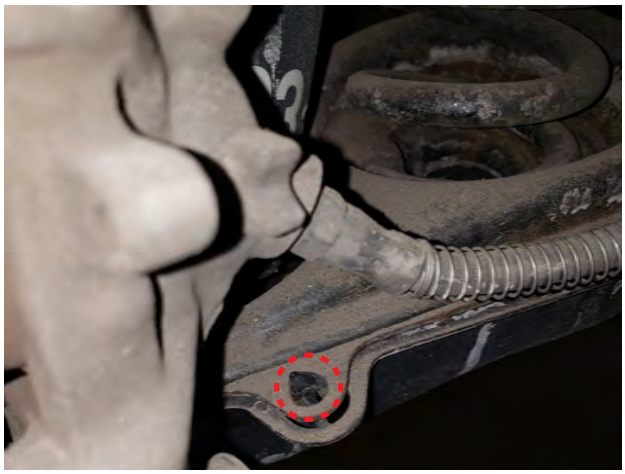

2. Unbolt the stabilizer end link and lower shock eye.

3. Support the lower control arm. Unbolt the lower control arm from the crossmember.

4. Remove the coil spring and rubber spring seats.

W204 Removal

NOTE *For W212 removal, the spring cup can be unmounted to ease the removal of the rubber spring seat but must be reinstalled.*

W212 Removal

5. Unfasten the shock upper mount from within the luggage compartment. Remove the shock assembly.

6. Disassemble the upper mount from the shock rod.

SECTION 3. INSTALL THE AIR SUSPENSION

1. Begin by applying thread sealant to the threads of the fitting. Tighten the fitting to the air spring assembly 1 3/4 turns beyond hand-tight.

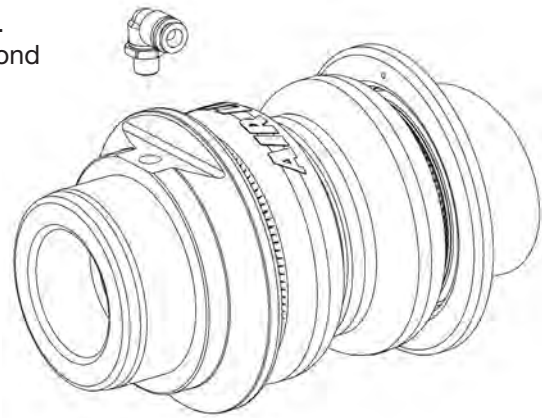

2. Attach the upper mount to the new shock rod. Torque to 28Nm (21 lb.-ft.).

3. Install the shock assembly to the chassis and torque upper mount nuts to 15Nm (11 lb.-ft.), release pressure and continue torque to 35Nm (26 lb.-ft.).

4. Insert the air spring assembly and nest into the lower control arm. Lift the control arm and attach to the crossmember. Do not torque until at desired ride height with load.

5. Attach the shock and end link to the control arm. Do not torque until at desired ride height with load.

6. Secure the air spring assembly to the lower control arm with the centering spacer, lock washer, and bolt. Torque the bolt to 27Nm (20 lb.-ft.)

7. Reinstall fender liner, if removed. Reinstall wheels and torque to 110Nm (81 lb.-ft.).

SECTION 4. ROUTE THE AIR LINES

AFTER INSTALLATION, ENSURE ALL ORIGINAL EQUIPMENT VEHICLE SAFETY FEATURES ARE PROPERLY CALIBRATED BY A QUALIFIED TECHNICIAN. CHANGING VEHICLE HEIGHT MAY AFFECT FUNCTIONING OF SAFETY SENSORS AND CAMERAS.

1. Fully compress the suspension using a jack. With the suspension compressed, review the best routing for the air line that is clear of all suspension components and axle.
2. Routing should allow for the suspension to extend and steer without kinking, pulling the line tight or rubbing on other components. Following the brake line routing is often a good place to start. Check clearances to all other components.

Finished Installation

Congratulations!

You are now the proud owner of an industry leading Air Lift Performance air suspension system. Enjoy!

Before Operating

SET THE RIDE HEIGHT

1. Refer to the User Guide supplied with this kit to set up the suspension.

Torque Specifications			
Location	TTY*	Nm	lb.-ft.
Control arm to crossmember	✓	50+60 degrees	37+60 degrees
End link to control arm	✓	20+180 degrees	15+180 degrees
Shock to control arm		98	72
Shock rod to upper mount		28	21
Shock upper mount to chassis		15 then 35	11 then 26
Air spring bolts (all)		27	20
Wheel bolts		110	81
Air fitting		1 3/4 turns beyond hand-tight with thread sealant	

* Torque-to-yield bolts

THIS KIT REQUIRES THE REMOVAL OF FACTORY TORQUE-TO-YIELD BOLTS. THESE BOLTS ARE DESIGNED TO BE REPLACED AFTER THEY HAVE BEEN LOOSENED. TORQUE-TO-YIELD BOLTS ARE INDICATED IN THE INSTRUCTIONS AND IN THE TORQUE SPECIFICATION CHART.

2. Upon successful completion of the installation, follow these pressure requirements for the air springs.

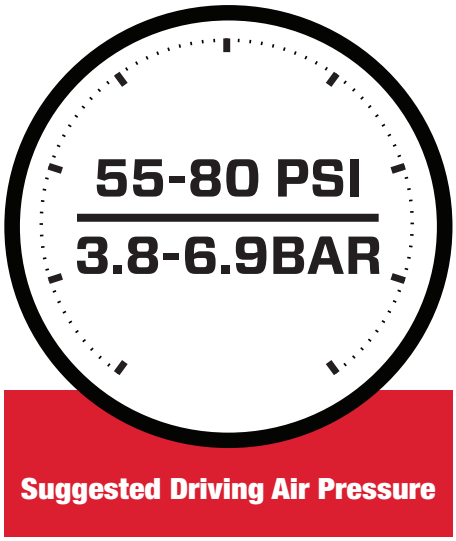

FAILURE TO MAINTAIN ADEQUATE MINIMUM PRESSURE (OR PRESSURE PROPORTIONAL TO LOAD) MAY RESULT IN EXCESSIVE BOTTOMING OUT AND **WILL VOID THE WARRANTY**.

CHECK FOR BINDING

MAKE SURE THE FRONT WHEELS ARE STRAIGHT WHEN DEFLATING AND REINFLATING AIR SPRINGS.

1. Inflate and deflate the system (do not exceed 8.6BAR [125 PSI]) to check for clearance or binding issues. With the air springs deflated, check clearances on everything so as not to pinch brake lines, vent tubes, etc. Clear lines if necessary.

2. Inflate the air springs to 5.2-6.2BAR (75-90 PSI) and check all connections for leaks.

INSTALLATION CHECKLIST

- ☐ **Clearance** — Inflate the air springs to 5.2-6.2BAR (75-90 PSI) and make sure there is at least 13mm (1/2") clearance from anything that might rub against the air spring. This should be checked with the air spring fully inflated and fully deflated.
- ☐ **Leak** — Inflate the air springs to 5.2-6.2BAR (75-90 PSI) and check all connections for leaks. All leaks must be eliminated before the vehicle is road tested.
- ☐ **Heat** — Be sure there is sufficient clearance from heat sources, at least 152mm (6") from air springs and air lines. If a heat shield was included in the kit, install it. If there is no heat shield, but one is required, call Air Lift customer service at **(800) 248-0892**.
- ☐ **Fastener** — Recheck all bolts for proper torque.
- ☐ **Road** — Inflate the air springs to recommended driving pressures (see previous page). Drive the vehicle 16km (10 miles) and recheck for clearance, loose fasteners and air leaks.
- ☐ **Operating instructions** — If professionally installed, the installer should review the operating instructions with the owner. Be sure to provide the owner with all paperwork that came with the kit.

DAMPING ADJUSTMENT

1. The dampers in this kit have 30 settings, or “clicks,” of adjustable compression and rebound damping characteristics. Damping is changed through the damper rod using the supplied adjuster (example shown here) or a 3mm hex key (not included).

2. Turn the adjuster clockwise (H) and the damping settings are hardened, reducing oscillations and body motion. Turn the adjuster counterclockwise (S) and the damping is softened.

3. Each damper in this kit is preset to “-16 clicks.” This means that the damper is adjusted 16 clicks away from full stiff, which starts at 0. Counting up from full stiff is the preferred method of keeping track of, or setting, damping. This setting was developed on a 2009 Mercedes C300.

For more information, refer to the User Guide.

Limited Warranty and Return Policy

Air Lift Company provides a 1-year limited warranty to the original purchaser of Air Lift Performance damper kits from the date of original purchase, that the products will be free from defects in workmanship and materials when used on vehicles as specified by Air Lift Company and under normal operating conditions, subject to the requirements and exclusions set forth in the full Limited Warranty and Return Policy that is available online at **www.airliftperformance.com/warranty**.

For additional warranty information contact Air Lift Company customer service.

Thank you for purchasing Air Lift Performance products!

Need Help?

The Air Lift Company customer service department is open from 8 a.m. to 8 p.m. ET Monday through Friday. Call (800) 248-0892 or (517) 322-2144 for calls from outside the U.S. and Canada.

CONNECT BY SEARCHING FOR **AIR LIFT PERFORMANCE** *#LIFEONAIR*

MADE IN USA
WITH GLOBAL
COMPONENTS

2727 Snow Road Lansing, MI 48917 or P.O. Box 80167 Lansing, MI 48908-0167
Toll Free (800) 248-0892 • Local (517) 322-2144 • Fax (517) 322-0240
www.airliftperformance.com

Air Lift Company reserves the right to make changes and improvements to its products and publications at any time.
For the latest version of this manual, contact Air Lift Company at (800) 248-0892 or visit airliftperformance.com.

Printed in the USA
JJC-0222

California: ⚠WARNING: Cancer and Reproductive Harm – www.P65Warnings.ca.gov