Air Lift PERFORMANCE

Kit 75539

BMW e39

front application

AIR LIFT PERFORMANCE™

INSTALLATION GUIDE

For maximum effectiveness and safety, please read these instructions completely before proceeding with installation.

Failure to read these instructions can result in an incorrect installation.

MN-778 • (011202) • ERN 7246

TABLE OF CONTENTS

Introduction 2
Notation Explanation 2
Important Safety Notices 2

Installation Diagram 3
Hardware List 3

Installing the Air Suspension 4
Preparing the Vehicle 4
Stock Shock Removal 4
Air Suspension Installation 6
Damping Adjustment 8
Aligning the Vehicle 8

Before Operating 9
Installation Checklist 9
Post-installation checklist 9

Product Use, Maintenance and Servicing 10
Suggested Driving Air Pressure and Maximum Air Pressure 10
Maintenance Guidelines 10
Troubleshooting Guide 10
Frequently Asked Questions 10
Tuning the Air Pressure 11
Checking for Leaks 11
Fixing Leaks 11

Warranty and Returns Policy 12

Replacement Information 12

Contact Information 12

Introduction

The purpose of this publication is to assist with the installation, maintenance and troubleshooting of this BMW e39 performance kit.

It is important to read and understand the entire installation guide before beginning installation or performing any maintenance, service or repair. The information includes a hardware list, tool list, step-by-step installation information, maintenance tips, safety information and a troubleshooting guide.

Air Lift Company reserves the right to make changes and improvements to its products and publications at any time. For the latest version of this manual, contact Air Lift Company at (800) 248-0892 or visit our website at www.airliftcompany.com.

NOTATION EXPLANATION

Hazard notations appear in various locations in this publication. Information which is highlighted by one of these notations must be observed to help minimize risk of personal injury or possible improper installation which may render the vehicle unsafe. Notes are used to help emphasize areas of procedural importance and provide helpful suggestions. The following definitions explain the use of these notations as they appear throughout this guide.

⚠ DANGER INDICATES IMMEDIATE HAZARDS WHICH WILL RESULT IN SEVERE PERSONAL INJURY OR DEATH.

⚠ WARNING INDICATES HAZARDS OR UNSAFE PRACTICES WHICH COULD RESULT IN SEVERE PERSONAL INJURY OR DEATH.

⚠ CAUTION INDICATES HAZARDS OR UNSAFE PRACTICES WHICH COULD RESULT IN DAMAGE TO THE MACHINE OR MINOR PERSONAL INJURY.

NOTE *Indicates a procedure, practice or hint which is important to highlight.*

IMPORTANT SAFETY NOTICES

The installation of this kit does not alter the Gross Vehicle Weight Rating (GVWR) or payload of the vehicle. Check your vehicle's owner's manual and do not exceed the maximum load listed for your vehicle.

Gross Vehicle Weight Rating: The maximum allowable weight of the fully loaded vehicle (including passengers and cargo). This number — along with other weight limits, as well as tire, rim size and inflation pressure data — is shown on the vehicle's Safety Compliance Certification Label.

Payload: The combined, maximum allowable weight of cargo and passengers that the vehicle is designed to carry. Payload is GVWR minus the Base Curb Weight.

⚠ WARNING DO NOT INFLATE AIR SPRINGS WHILE OFF OF THE VEHICLE. DAMAGE TO ASSEMBLY MAY RESULT AND VOID WARRANTY.

⚠ CAUTION DO NOT WELD TO, OR MODIFY LIFESTYLE STRUTS/SHOCKS IN ANY WAY. DAMAGE TO UNIT MAY OCCUR AND WILL VOID WARRANTY.

Installation Diagram

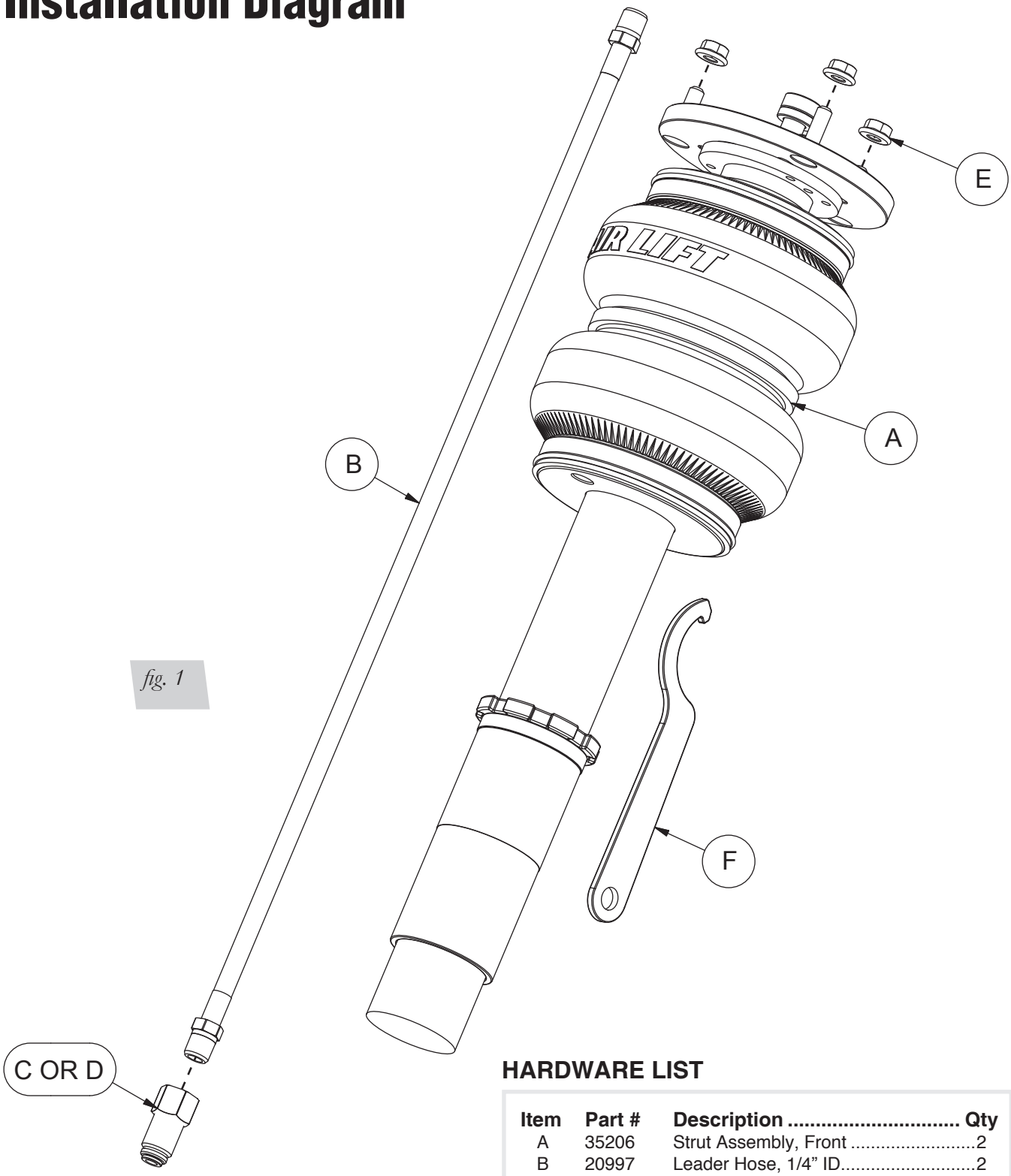

fig. 1

HARDWARE LIST

Item	Part #	Description	Qty
A	35206	Strut Assembly, Front	2
B	20997	Leader Hose, 1/4” ID	2
C	21810	1/4”FNPT-1/4”PTC “DOT”	2
D	21987	1/4”FNPT-3/8”PTC “DOT”	2
E	26945-010	M8 X 1.25 Nut	6
F		Collar Wrench	1

STOP! Missing or damaged parts? Call Air Lift customer service at (800) 248-0892 for a replacement part.

Installing the Air Suspension

PREPARING THE VEHICLE

NOTE *Vehicle shown is a 1997 BMW 540i; Some model/year variation is to be expected.*

1. Support the vehicle with jack stands or a hoist at approved lifting points.
2. Remove the front wheels (fig. 2).

NOTE *If the vehicle is equipped with a headlight alignment system, disconnect the range control linkage first! Failure to do so may over extend the sensor resulting in headlight misalignment. (fig. 3)*

fig. 2

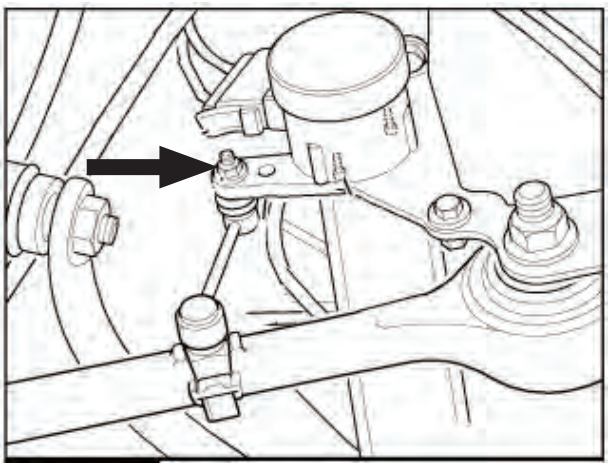

fig. 3

STOCK STRUT REMOVAL

1. Disconnect the brake caliper from the brake hanger bracket and tie to the vehicle chassis (fig. 4).

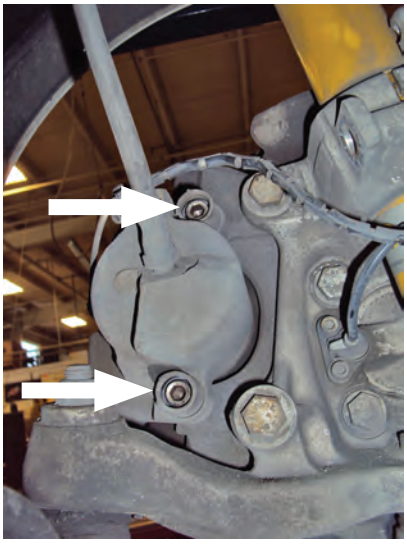

fig. 4

2. Press the track rod out of the spindle (fig. 5).

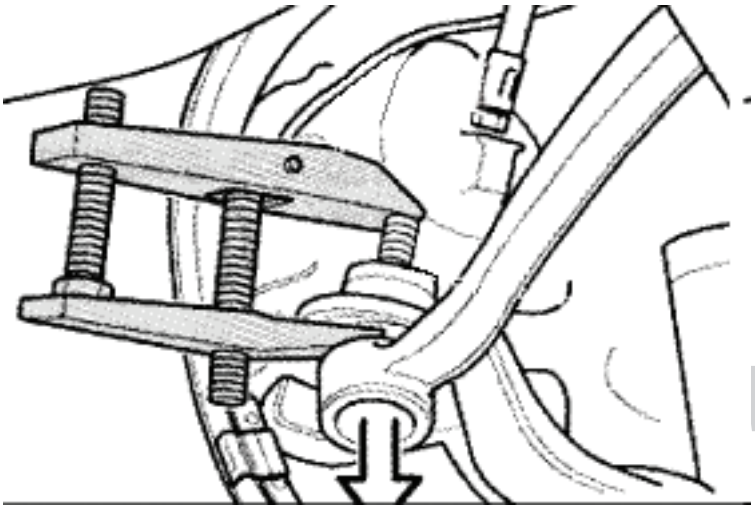

fig. 5

3. Remove the pinch bolt from the spindle. Then remove the second bolt holding the stabilizer bar bracket to the spindle. (figs. 6, 7 & 8)

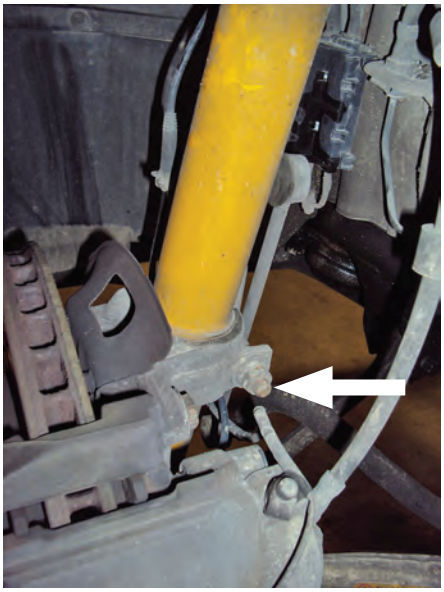

fig. 6

fig. 7

fig. 8

4. Remove the strut cap and unthread the three upper bracket nuts within the engine compartment (fig. 9).

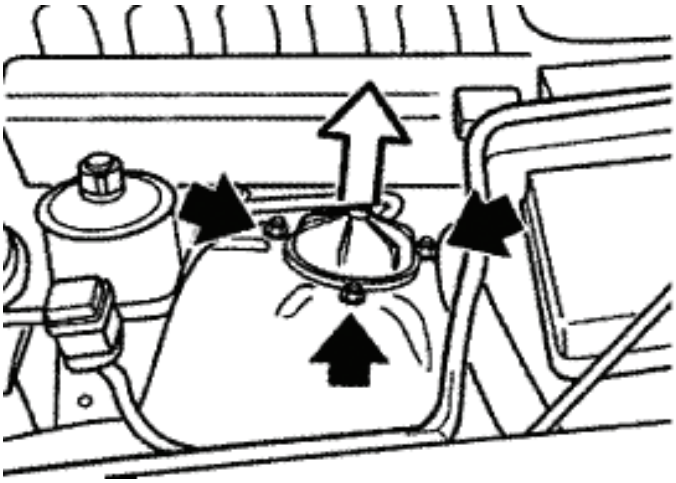

fig. 9

5. Lower the strut and pull outside the vehicle body (fig, 10). Be careful not to damage the fender!

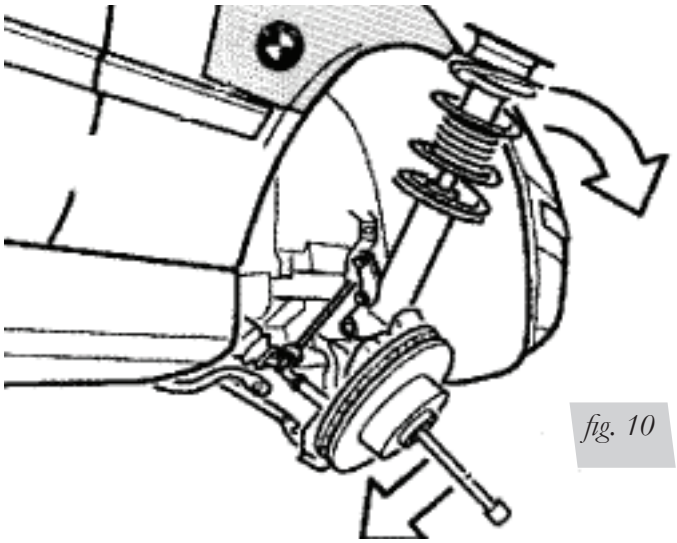

fig. 10

6. Lightly spread the spindle collar and remove the strut.

AIR SUSPENSION INSTALLATION

1. Begin by installing the leader line into the air spring (fig. 11). Wrap the threads of the leader hose with Teflon tape or thread sealant. Tighten the appropriate fitting to the airline 1 3/4 turns beyond hand tight. Tighten the leader line into the air spring 1 3/4 turns beyond hand tight.

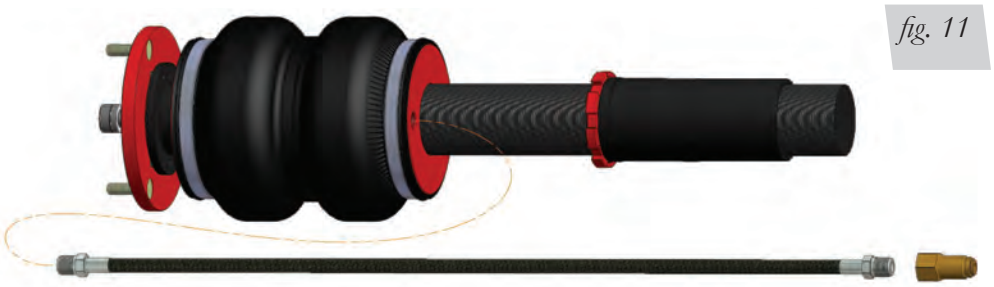

fig. 11

2. Slide the new strut assembly into the spindle collar with the leader hose closest to the engine bay. Align the strut assembly with the upper bracket holes in the strut tower. Lift the spindle and strut assembly into place and thread the nuts onto the camber plate studs. *See Torque Specifications chart*
3. Reinstall the stabilizer bar bracket. *See Torque Specifications chart*
4. Reinstall the tie rod. *See Torque Specifications chart*
5. Reinstall the brake caliper. *See Torque Specifications chart*
6. Route the braided air line in a manner where the line will not be kinked, rubbed, or stretched. Cycle the suspension up and down; turn the wheel lock-to-lock to verify the air line is protected and free from damage. Generally, routing the air lines along with the brake line is a good place to start.
7. Loosen all pivoting bushing bolts and torque to values within the Torque Specifications chart.

Torque Specifications		
Location	Nm	ft. lbs.
Camber plate to chassis	24	18
Camber plate adjustment bolts	15	11
Strut pinch bolt	110	81
Forward control arm to chassis	77.5	57
Rearward control arm to chassis	110	81
Tie rod end to steering knuckle	80	59
Stabilizer bracket to steering knuckle	59	43.5
Stabilizer link to bracket	65	48
Brake caliper bolt	25-30	18-22
Wheel bolts	120	89

Table 1

DAMPING ADJUSTMENT

The struts in this kit have 30 settings or “clicks” of adjustable compression and rebound damping characteristics. Damping is changed through the adjuster at the top of the strut rod. Turn the adjuster clockwise and the damping settings are hardened. Turn the adjuster counterclockwise and the damping is softened. Each front strut is preset to “-15 clicks”. This means that the strut is adjusted 15 clicks away from full stiff. Counting down from full stiff is the preferred method of keeping track/setting of damping. This setting may need to be adjusted to different vehicles and driving characteristics.

fig. 12

ALIGNING THE VEHICLE

1. Using the control system, set the vehicle height to the new custom ride height.
2. If the custom ride height is lower than the original height, we recommend loosening all pivot points (bolts, nuts) on any control arm, strut arm or radius rod that contains bushings. Once they have been loosened, re-torque to stock specifications.

NOTE

It may be necessary to cycle the suspension to loosen the bushing up from its mount. This will help re-orient the bushing at its new position based on the custom ride height.

Before Operating

⚠ CAUTION MAKE SURE THE FRONT WHEELS ARE STRAIGHT WHEN DEFLATING AND REINFLATING AIR BAGS.

1. Inflate and deflate the system (do not exceed 125 PSI) to check for clearance or binding issues. With the air springs deflated, check clearances on everything so as not to pinch brake lines, vent tubes, etc. Clear lines if necessary.
2. Inflate the air springs to 75PSI - 90PSI and check all connections for leaks.
3. Air Lift part #27669 or #27671, AutoPilot V2 Air Management System, is highly recommended for this product.
4. Please continue by reading the Product Use, Maintenance and Servicing section.

INSTALLATION CHECKLIST

- ❑ Clearance test — Inflate the air springs to 75-90 PSI and make sure there is at least ½" clearance from anything that might rub against each sleeve. Be sure to check the tire, brake drum, frame, shock absorbers and brake cables.
- ❑ Leak test before road test — Inflate the air springs to 75PSI - 90PSI and check all connections for leaks. All leaks must be eliminated before the vehicle is road tested.
- ❑ Heat test — Be sure there is sufficient clearance from heat sources, at least 6" for air springs and air lines. If a heat shield was included in the kit, install it. If there is no heat shield, but one is required, call Air Lift customer service at (800) 248-0892.
- ❑ Fastener test — Recheck all bolts for proper torque.
- ❑ Road test — The vehicle should be road tested after the preceding tests. Inflate the springs to recommended driving pressures. Drive the vehicle 10 miles and recheck for clearance, loose fasteners and air leaks.
- ❑ Operating instructions — If professionally installed, the installer should review the operating instructions with the owner. Be sure to provide the owner with all of the paperwork that came with the kit.

Technician's Signature _____

Date _____

POST-INSTALLATION CHECKLIST

- ❑ Overnight leak down test — Recheck air pressure after the vehicle has been used for 24 hours. If the pressure has dropped more than 5 PSI, then there is a leak that must be fixed. Either fix the leak yourself or return to the installer for service.
- ❑ Air pressure requirements — I understand the air pressure requirements of my air spring system. Regardless of load, the air pressure should always be adjusted to maintain adequate ride height at all times while driving.
- ❑ Thirty day or 500 mile test — I understand that I must recheck the air spring system after 30 days or 500 miles, whichever comes first. If any part shows signs of rubbing or abrasion, the source should be identified and moved, if possible. If it is not possible to relocate the cause of the abrasion, the air spring may need to be remounted. If professionally installed, the installer should be consulted. Check all fasteners for tightness.

Product Use, Maintenance and Servicing

Suggested Driving Air Pressure	Maximum Air Pressure
50 PSI	125 PSI
FAILURE TO MAINTAIN ADEQUATE MINIMUM PRESSURE (OR PRESSURE PROPORTIONAL TO LOAD) WILL RESULT IN BOTTOMING OUT, OVER-EXTENSION OR RUBBING AGAINST ANOTHER COMPONENT AND WILL **VOID THE WARRANTY**.	

MAINTENANCE GUIDELINES

NOTE *By following these steps, vehicle owners will obtain the longest life and best results from their air spring.*

1. Check the air pressure before driving.
2. Never inflate beyond 125 PSI.
3. If you develop an air leak in the system, use a soapy water solution to check all air line connections, before deflating and removing the spring.
4. When increasing load, always adjust the air pressure to maintain normal ride height. Increase or decrease pressure from the system as necessary to attain normal ride height for optimal ride and handling. Remember that loads carried behind the axle (including tongue loads) require more leveling force (pressure) than those carried directly over the axle.

⚠ CAUTION FOR YOUR SAFETY AND TO PREVENT DAMAGE TO YOUR VEHICLE, DO NOT EXCEED MAXIMUM GROSS VEHICLE WEIGHT RATING (GVWR), AS INDICATED BY THE VEHICLE MANUFACTURER. ALTHOUGH YOUR AIR SPRINGS ARE RATED AT A MAXIMUM INFLATION PRESSURE OF 125 PSI, THE AIR PRESSURE ACTUALLY NEEDED IS DEPENDENT ON YOUR LOAD.

5. Always add air to the springs in small quantities, checking the pressure frequently. Sleeves require less air volume than a tire and inflate quickly.
6. Should it become necessary to raise the vehicle by the frame, make sure the control system is turned off before lifting.

TROUBLESHOOTING GUIDE

1. Leak test the air line connections, the threaded connection into the air spring, and all fittings in the control system.
2. Inspect the air lines to be sure none are pinched. Tie straps may be too tight. Loosen or replace the strap and replace leaking components.
3. Inspect the air line for holes and cracks. Replace as needed.
4. Look for a kink or fold in the air line. Reroute as needed.

If the preceding steps do not solve the problem, it is possibly caused by a failed air spring — either a factory defect or an operating problem. Please call Air Lift at (800) 248-0892 for assistance.

FREQUENTLY ASKED QUESTIONS

Q. Will installing air springs increase the weight ratings of a vehicle?

No. Adding air springs will not change the weight ratings (GAWR, GCWR and/or GVWR) of a vehicle. Exceeding the GVWR is dangerous and voids the Air Lift warranty.

Q. How long should air springs last?

If the air springs are properly installed and maintained they can last indefinitely.

Q. Will raising the vehicle on a hoist for service work damage the air springs?

No. The vehicle can be lifted on a hoist for short-term service work such as tire rotation or oil changes. However, if the vehicle will be on the hoist for a prolonged period of time, support the axle with jack stands in order to take the tension off of the air springs.

TUNING THE AIR PRESSURE

Pressure determination comes down to three things — level vehicle, ride comfort, and stability.

1. **Level vehicle**

   If the vehicle's headlights are shining into the trees or the vehicle is leaning to one side, then it is not level. Raise the air pressure to correct either of these problems and level the vehicle.

2. **Ride comfort**

   If the vehicle has a rough or harsh ride it may be due to either too much pressure or not enough. Try different pressures to determine the best ride comfort. See Air Lift suggested driving air pressure.

3. **Stability**

   Stability translates into safety and should be the priority, meaning the driver may need to sacrifice a perfectly level and comfortable ride. Stability issues include roll control, bounce, dive during braking and sponginess. Tuning out these problems usually requires additional air pressure, strut damping, or both.

CHECKING FOR LEAKS

1. Inflate the air spring to 80 PSI.
2. Spray all connections and the inflation valves with a solution of 1/5 liquid dish soap and 4/5 water. Spot leaks easily by looking for bubbles in the soapy water.
3. After the test, deflate the springs to the minimum pressure required to restore the system to normal ride height.
4. Check the air pressure again after 24 hours. A 2 - 4 PSI loss after initial installation is normal. Retest for leaks if the loss is more than 5 lbs.

FIXING LEAKS

1. If there is a problem with a swivel fitting:
   a. Check the air line connection by deflating the spring and removing the line by pulling the collar against the fitting and pulling firmly on the air line. Trim 1" off the end of the air line. Be sure the cut is clean and square (see fig. 13). Reinsert the air line into the push-to-connect fitting.
   b. Check the threaded connection by tightening the swivel fitting another ½ turn. If it still leaks, deflate the air spring, remove the fitting, and re-coat the threads with thread sealant. Reinstall by hand tightening as much as possible and then use a wrench for an additional two turns.
2. If the preceding steps have not resolved the problem, call Air Lift customer service at (800) 248-0892.

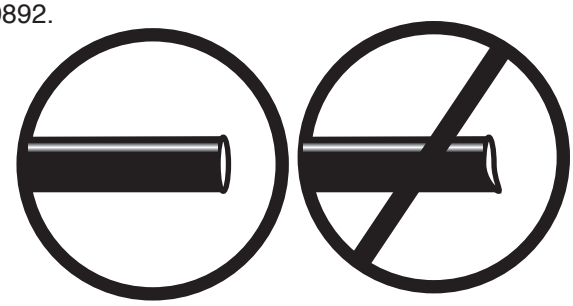

fig. 13

Warranty and Returns Policy

Air Lift Company warrants its performance products for one year to the original purchaser against manufacturing defects one year from the date of purchase when used on cars and trucks as specified under normal operating conditions. The warranty does not apply to products that have been improperly applied, improperly installed, or which have not been maintained in accordance with installation instructions furnished with all products. The consumer will be responsible for removing (labor charges) the defective product from the vehicle and returning it, transportation costs prepaid, to the dealer from which it was purchased or to Air Lift Company for verification.

Air Lift will repair or replace, at its option, defective products or components. A minimum $10.00 shipping and handling charge will apply to all warranty claims. Before returning any defective product, you must call Air Lift at (800) 248-0892 in the U.S. and Canada (elsewhere, (517) 322-2144) for a Returned Materials Authorization (RMA) number. Returns to Air Lift can be sent to: Air Lift Company • 2727 Snow Road • Lansing, MI • 48917.

Product failures resulting from abnormal use or misuse are excluded from this warranty. The loss of use of the product, loss of time, inconvenience, commercial loss or consequential damages is not covered. The consumer is responsible for installation/reinstallation (labor charges) of the product. Air Lift Company reserves the right to change the design of any product without assuming any obligation to modify any product previously manufactured.

This warranty gives you specific legal rights and you may also have other rights that may vary from state-to-state. Some states do not allow limitations on how long an implied warranty lasts or allow the exclusion or limitation of incidental or consequential damages. The above limitation or exclusion may not apply to you. There are no warranties, expressed or implied including any implied warranties of merchantability and fitness, which extend beyond this warranty period. There are no warranties that extend beyond the description on the face hereof. Seller disclaims the implied warranty of merchantability. (Dated proof of purchase required.)

Replacement Information

If you need replacement parts, contact the local dealer or call Air Lift customer service at (800) 248-0892. Most parts are immediately available and can be shipped the same day.

Contact Air Lift Company customer service at (800) 248-0892 first if:

- Parts are missing from the kit.
- Need technical assistance on installation or operation.
- Broken or defective parts in the kit.
- Wrong parts in the kit.
- Have a warranty claim or question.

Contact the retailer where the kit was purchased:

- If it is necessary to return or exchange the kit for any reason.
- If there is a problem with shipping if shipped from the retailer.
- If there is a problem with the price.

Contact Information

If you have any questions, comments or need technical assistance contact our customer service department by calling (800) 248-0892, Monday through Friday, 8 a.m. to 8 p.m. Eastern Time. For calls from outside the USA or Canada, our local number is (517) 322-2144. You may also contact customer service anytime by e-mail at techsupport@airliftperformance.com.
For inquiries by mail, our address is PO Box 80167, Lansing, MI 48908-0167. Our shipping address for returns is 2727 Snow Road, Lansing, MI 48917.
You may also contact our sales team anytime by e-mail at sales@airliftperformance.com or on the web at www.airliftperformance.com.

NOTES

Need Help?

Contact our customer service department by calling (800) 248-0892. For calls from outside the USA or Canada, our local number is (517) 322-2144.

Thank you for purchasing Air Lift Performance products!

Air Lift Performance • 2727 Snow Road • Lansing, MI 48917 or PO Box 80167 • Lansing, MI 48908-0167
Toll Free (800) 248-0892 • Local (517) 322-2144 • Fax (517) 322-0240 • www.airliftperformance.com

Printed in
the USA

Air Lift™ PERFORMANCE

Kit 75639

BMW e39

Rear Application

CAUTION

READ PAGE 8 BEFORE INSTALLATION

air LIFT PERFORMANCE®

INSTALLATION GUIDE

For maximum effectiveness and safety, please read these instructions completely before proceeding with installation.

Failure to read these instructions can result in an incorrect installation.

MN-779 • (021501) • ECR 8170

TABLE OF CONTENTS

Introduction 2
Notation Explanation 2
Important Safety Notices 2

Installation Diagram 3
Hardware List 3

Installing the Air Suspension 4
Preparing the Vehicle 4
Stock Shock Removal 4
Air Suspension Installation 6
Damping Adjustment 9
Aligning the Vehicle 9
Adjusting Extended or Drop Height Using Lower Mount 10

Before Operating 12
Installation Checklist 12
Post-installation checklist 12

Product Use, Maintenance and Servicing 13
Suggested Driving Air Pressure and Maximum Air Pressure 13
Maintenance Guidelines 13
Troubleshooting Guide 13
Frequently Asked Questions 13
Tuning the Air Pressure 14
Checking for Leaks 14
Fixing Leaks 14

Limited Warranty and Return Policy 15

Replacement Information 15

Contact Information 15

Introduction

The purpose of this publication is to assist with the installation, maintenance and troubleshooting of this BMW e39 Performance kit.

It is important to read and understand the entire installation guide before beginning installation or performing any maintenance, service or repair. The information includes a hardware list, step-by-step installation information, maintenance tips, safety information and a troubleshooting guide.

Air Lift Performance reserves the right to make changes and improvements to its products and publications at any time. For the latest version of this manual, contact Air Lift Performance at (800) 248-0892 or visit our website at www.airliftperformance.com.

NOTATION EXPLANATION

Hazard notations appear in various locations in this publication. Information which is highlighted by one of these notations must be observed to help minimize risk of personal injury or possible improper installation which may render the vehicle unsafe. Notes are used to help emphasize areas of procedural importance and provide helpful suggestions. The following definitions explain the use of these notations as they appear throughout this guide.

⚠ DANGER INDICATES IMMEDIATE HAZARDS WHICH WILL RESULT IN SEVERE PERSONAL INJURY OR DEATH.

⚠ WARNING INDICATES HAZARDS OR UNSAFE PRACTICES WHICH COULD RESULT IN SEVERE PERSONAL INJURY OR DEATH.

⚠ CAUTION INDICATES HAZARDS OR UNSAFE PRACTICES WHICH COULD RESULT IN DAMAGE TO THE MACHINE OR MINOR PERSONAL INJURY.

NOTE *Indicates a procedure, practice or hint which is important to highlight.*

IMPORTANT SAFETY NOTICES

The installation of this kit does not alter the Gross Vehicle Weight Rating (GVWR) or payload of the vehicle. Check your vehicle's owner's manual and do not exceed the maximum load listed for your vehicle.

Gross Vehicle Weight Rating: The maximum allowable weight of the fully loaded vehicle (including passengers and cargo). This number — along with other weight limits, as well as tire, rim size and inflation pressure data — is shown on the vehicle's Safety Compliance Certification Label.

Payload: The combined, maximum allowable weight of cargo and passengers that the vehicle is designed to carry. Payload is GVWR minus the Base Curb Weight.

⚠ WARNING DO NOT INFLATE AIR SPRINGS WHILE OFF OF THE VEHICLE. DAMAGE TO ASSEMBLY MAY RESULT AND VOID WARRANTY.

⚠ CAUTION DO NOT WELD TO, OR MODIFY PERFORMANCE STRUTS/SHOCKS IN ANY WAY. DAMAGE TO UNIT MAY OCCUR AND WILL VOID WARRANTY.

Installation Diagram

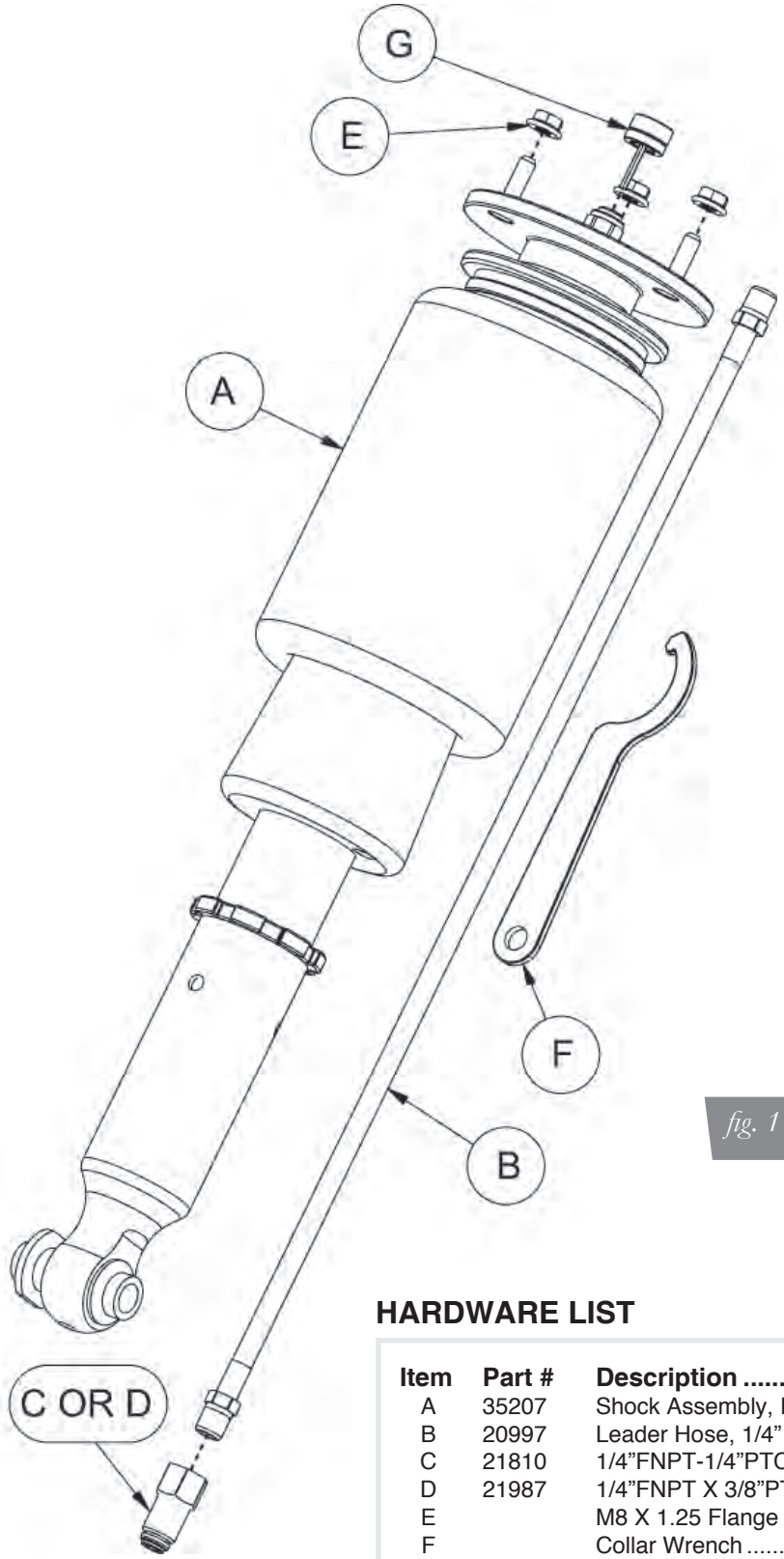

fig. 1

HARDWARE LIST

Item	Part #	Description ..... Qty
A	35207	Shock Assembly, Rear.....2
B	20997	Leader Hose, 1/4" ID.....2
C	21810	1/4"FNPT-1/4"PTC "DOT".....2
D	21987	1/4"FNPT X 3/8"PTC "DOT".....2
E		M8 X 1.25 Flange Nut.....6
F		Collar Wrench 1
G		Threaded Shock Adjuster 2

STOP! Missing or damaged parts? Call Air Lift customer service at (800) 248-0892 for a replacement part.

Installing the Air Suspension

PREPARING THE VEHICLE

NOTE *Vehicle shown is a 1997 BMW 540i; Some model/year variation is to be expected.*

1. Support the vehicle with jack stands or a hoist at approved lifting points.
2. Remove the rear wheels.

NOTE *If the vehicle is equipped with a headlight alignment system, disconnect the range control linkage first! Failure to do so may over extend the sensor resulting in headlight misalignment.*

STOCK SHOCK REMOVAL

1. Begin by removing the rear parcel shelf.
   a. Lift and remove all headrests from the back seat.
   b. Remove and disconnect the light from the C-pillar trim.

fig. 2

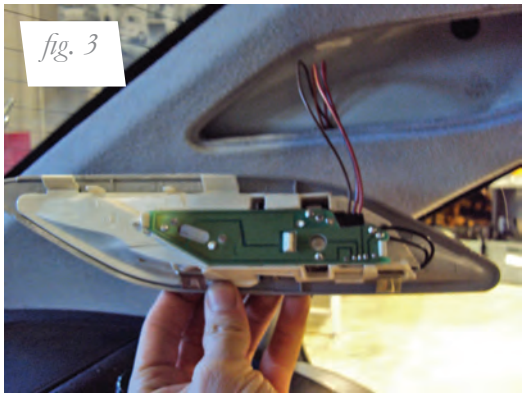
fig. 3

   c. To remove the C-pillar trim, pull carefully at the top of the trim and unclip. Unclip a second retaining clip near the base of the trim and remove both C-pillar trim pieces.

fig. 4

fig. 5

   d. Remove the rear seat bottom by lifting the front edge. Two clips near the front of the seat retain it in place. Release both clips and remove the seat bottom (figs. 6 and 7).
   e. With the seat bottom and headrests removed, lift the seat back upward until released and remove from the vehicle (Fig. 8).
   f. To remove the parcel shelf, first unclip the four securing clips and remove the center headrest support bracket. Pull the parcel shelf forward and down. If you choose to remove the shelf completely from the car, disconnect the seat belts from the bottom. This will allow you to remove the shelf (Figs. 9, 10 and 11).

fig. 6

fig. 7

fig. 8

fig. 9

fig. 10

fig. 11

g. Now the speakers are accessible. Remove the two screws from the speaker surround, lift up the speaker and pull forward. Disconnect the speaker and set aside.
h. With the shock mounts now visible, loosen the three shock upper nuts.

2. Unfasten the wheel liner and remove.
3. Disconnect the rear stabilizer bar end link (Fig. 12).

fig. 12

4. Remove all three lower control arm bolts and remove the arm (Figs. 13 and 14).

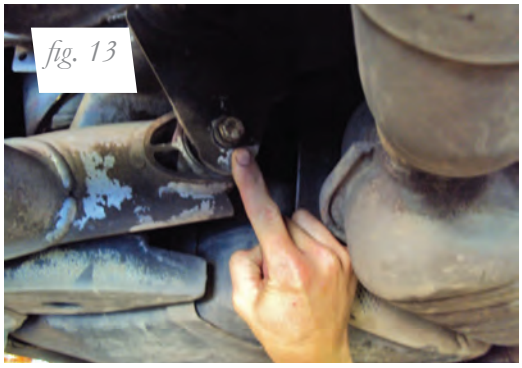
fig. 13

fig. 14

5. Unbolt the lower shock mount. Support the shock and finish removing the upper bracket bolts. Remove the shock assembly from the vehicle.

AIR SUSPENSION INSTALLATION

1. Begin by installing the leader line into the air spring (Fig. 15). Wrap the threads of the leader hose with Teflon tape or thread sealant. Tighten the appropriate fitting to the airline 1 3/4 turns beyond hand tight. Tighten the leader line into the air spring 1 3/4 turns beyond hand tight.

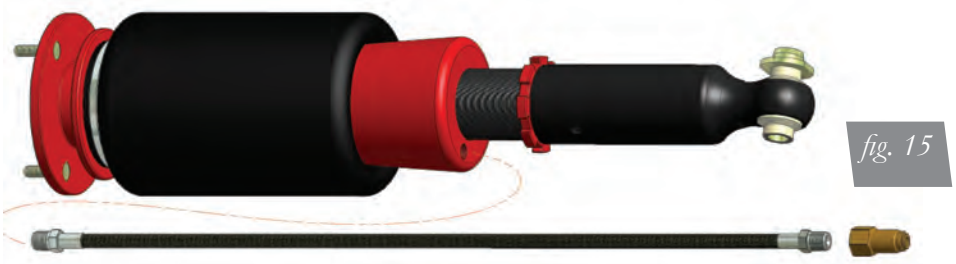
fig. 15

2. Repeat Steps 1-5 of the Stock Shock Removal section in reverse order. If using the flexible shock adjuster extension, repeat those steps along with step 4.
3. Attach the flexible extension to the shock adjuster (Fig. 16). Depending on how the flexible extension is routed, the extension can be trimmed down. In the installation shown, the adjuster is routed beside the seat belt opening (Fig. 17). Drill a 5/16 hole through the parcel shelf to accommodate the extension (Fig. 18). With the extension knob removed, the flexible portion can be trimmed down to better conceal the knob (Fig. 19). Once the shelf is in place, the extension knob can be re-installed (Fig. 20).

fig. 16

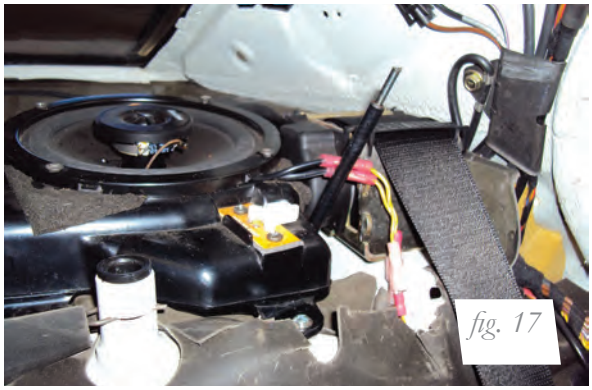
fig. 17

fig. 18

fig. 19

fig. 20

CAUTION

AFTER INITIAL INSTALLATION OF YOUR STRUTS/SHOCKS:

- DO NOT CYCLE THE SUSPENSION WITH THE AIR-LINE CONNECTED TO THE LEADER HOSE WITHOUT FIRST ADDING AIR SPRING PRESSURE. DOING SO MAY CAUSE THE AIR SPRING TO IMPROPERLY INFLATE (FIG. 21). IT IS SAFE TO CYCLE THE SUSPENSION TO CHECK FOR CLEARANCES ETC. WITH THE LEADER HOSE OPEN TO ATMOSPHERE (DISCONNECTED FROM AIR-LINE).
- BEFORE SETTING VEHICLE ON THE GROUND FOR THE FIRST TIME, IT IS VERY IMPORTANT TO INFLATE THE AIR SPRINGS TO AT LEAST 50PSI. THIS WILL PREVENT ANY POSSIBILITY OF THE AIR SPRING KICKING OUT AND CAUSING A LEAK (FIG.22).

fig. 21

Caused by cycling with air-line attached without pressure. Remove air-line from spring to release vacuum and re-attach. Inflate to 50+psi before lowering car to ground.

fig. 22

Shows what spring looks like after lowering car to ground with <50psi and raising it with air pressure. Do NOT drive!

fig. 23

Shows what spring looks like when installed correctly.

4. Fully compress the suspension using a jack. With the suspension compressed, review the best routing for the leader hose that is clear of all suspension components and axle. Routing should also allow for the suspension to extend without kinking or pulling the line tight or rubbing on other components. Following the brake line routing is often a good place to start. Check clearances to all other components.
5. With the suspension fully compressed, take a measurement from the fender to some reference point – typically the center of the axle. Record this measurement as Max Compression.
6. Cycle the suspension to Max Extension and record the measurement from the same reference points.
7. Add ME and MC then divide by 2. Set the suspension to this point. This position will give 50% stroke in either direction and is a starting point for ride height (Fig. 24).

Formula for Calculating Ride Height
(ME+MC)÷2=MID STROKE

fig. 24

8. With the suspension at this position, loosen, then re-torque the lower control arm bolts to manufacturer's specifications (Table 1).

Torque Specifications		
Location	Nm	ft. lbs.
Upper bracket to chassis	24	18
Shock eye bolt	127	94
Control arm to spindle bolt	60	44
Control arm cam bolt	58	43
Control arm forward bolt	58	43
Upper control arm to subframe	110	81
Stabilizer link	65	48
Seat belt lower fastener	48	35
Wheel bolts	120	89

Table 1

DAMPING ADJUSTMENT

The shocks in this kit have 30 settings, or "clicks", of adjustable compression and rebound damping characteristics. Damping is changed through the shock rod using the supplied adjuster (figs. 25 and 26) or a 3mm allen wrench.

Turn the adjuster clockwise and the damping settings are hardened. Turn the adjuster counterclockwise and the damping is softened.

Each shock is preset to "-15 clicks". This means that the shock is adjusted 15 clicks away from full stiff. Counting down from full stiff is the preferred method of keeping track of, or setting, damping. This setting may need to be adjusted to different vehicles and driving characteristics.

fig. 25

fig. 26

ALIGNING THE VEHICLE

1. Using the control system, set the vehicle height to the new custom ride height.
2. If the custom ride height is lower than stock, we recommend loosening all pivot points (bolts, nuts) on any control arm, strut arm or radius rod that contains bushings. Once they have been loosened, re-torque to stock specifications.

NOTE

It may be necessary to cycle the suspension to loosen the bushing up from its mount. This will help re-orient the bushing at its new position and increase life of the bushings based on the custom ride height.

ADJUSTING EXTENDED OR DROP HEIGHT USING LOWER MOUNT

Air Lift dampers have been pre-set at the factory to provide maximum drop height while maintaining adequate tire clearance to the air spring. If extended height (lift) is desired (same as reducing drop height) and there is still adjustment available at the upper mount, use the following procedure:

1. Support the vehicle with jack stands or a hoist at approved lifting points.
2. Remove the wheel.
3. Using the supplied spanner wrench, loosen the lower locking collar. (Fig. 27)

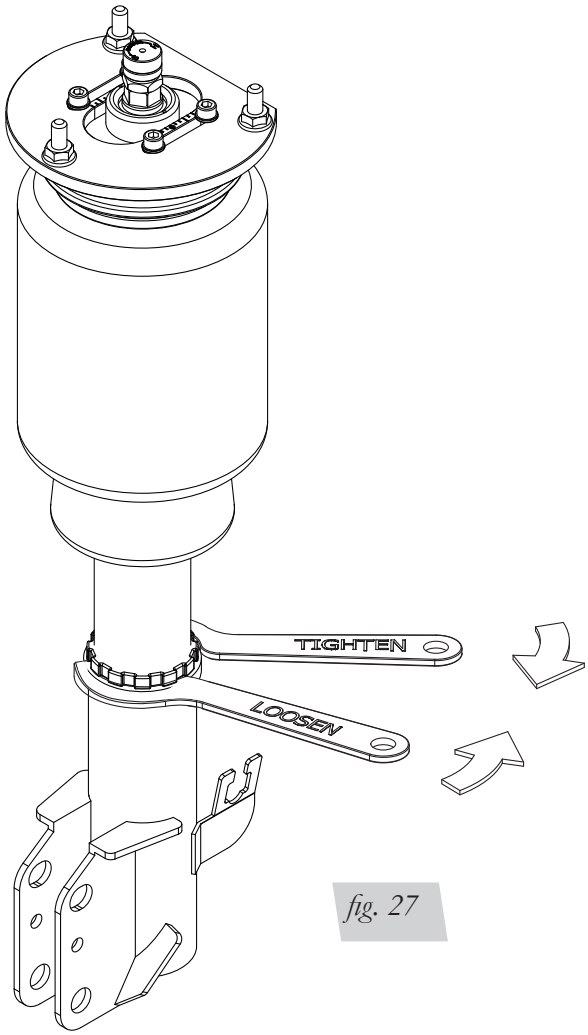

fig. 27

4. Deflate the air spring to 0 PSI on the corner you are adjusting.
5. Disconnect lower mount from suspension.
6. Spin the lower mount to the desired location.

NOTE

Not all models will have further drop height available.

7. Re-install lower mount to suspension and torque fasteners.
8. Tighten the lower locking collar to the lower mount using significant force.

⚠ CAUTION

WHEN ADJUSTING HEIGHT UPWARD, MAKE SURE THAT THE DAMPER BODY ENGAGES ALL THE THREADS OF THE LOWER MOUNT (FIG. 28). WHEN ADJUSTING DOWNWARD, MAKE SURE THERE IS ADEQUATE AIR SPRING CLEARANCE TO THE TIRE/WHEEL ASSEMBLY. CLEARANCE MUST BE CHECKED WITH SYSTEM FULLY DEFLATED AS WELL AS FULLY INFLATED TO ENSURE THAT NO RUBBING OCCURS. FAILURE TO MAINTAIN ADEQUATE CLEARANCE CAN RESULT IN AIR SPRING FAILURE AND WILL NOT BE COVERED UNDER WARRANTY.

⚠ CAUTION

DO NOT ADJUST HEIGHT BY SPINNING AIR SPRING ON DAMPER! DOING SO MAY CAUSE AN AIR LEAK AND COMPROMISE THE ASSEMBLY.

FOR STRUTS:

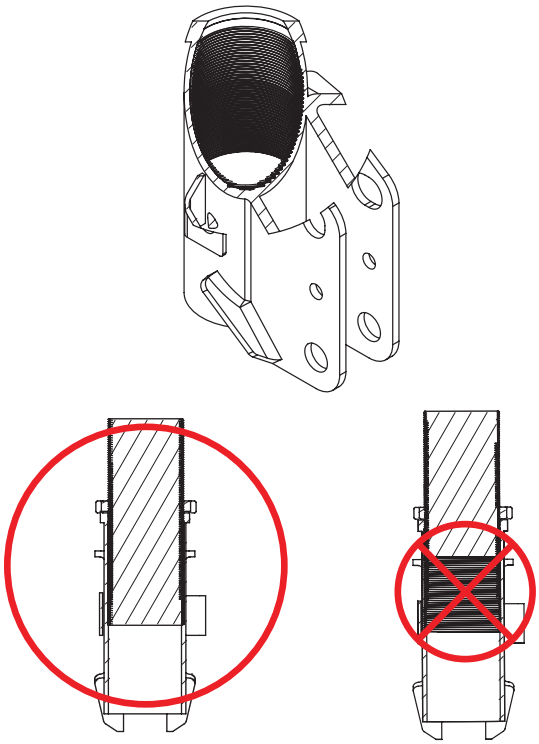

OK, no threads showing.

Not OK, threads are showing.

FOR SHOCKS:

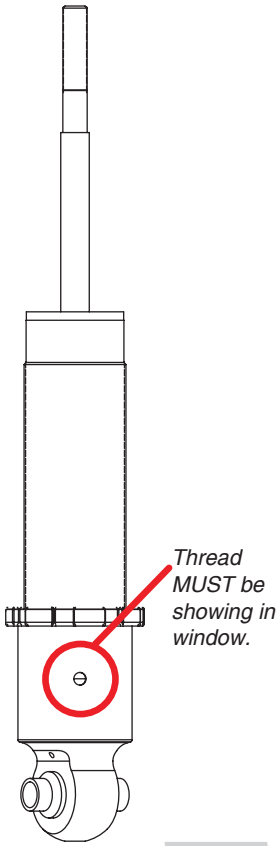

fig. 28

Before Operating

CAUTION MAKE SURE THE FRONT WHEELS ARE STRAIGHT WHEN DEFLATING AND REINFLATING AIR BAGS.

1. Inflate and deflate the system (do not exceed 125 PSI) to check for clearance or binding issues. With the air springs deflated, check clearances on everything so as not to pinch brake lines, vent tubes, etc. Clear lines if necessary.
2. Inflate the air springs to 75-90 PSI and check all connections for leaks.
3. Air Lift part #27669 or #27671, AutoPilot V2 Air Management System, is highly recommended for this product.
4. Please familiarize yourself further with this product by reading the Product Use, Maintenance and Servicing section.

INSTALLATION CHECKLIST

- ❑ Clearance test — Inflate the air springs to 75-90 PSI and make sure there is at least 1/2" clearance from anything that might rub against each sleeve. Be sure to check the tire, brake drum, frame, shock absorbers and brake cables.
- ❑ Leak test before road test — Inflate the air springs to 75-90 PSI and check all connections for leaks. All leaks must be eliminated before the vehicle is road tested.
- ❑ Heat test — Be sure there is sufficient clearance from heat sources, at least 6" for air springs and air lines. If a heat shield was included in the kit, install it. If there is no heat shield, but one is required, call Air Lift customer service at (800) 248-0892.
- ❑ Fastener test — Recheck all bolts for proper torque.
- ❑ Road test — The vehicle should be road tested after the preceding tests. Inflate the springs to recommended driving pressures. Drive the vehicle 10 miles and recheck for clearance, loose fasteners and air leaks.
- ❑ Operating instructions — If professionally installed, the installer should review the operating instructions with the owner. Be sure to provide the owner with all of the paperwork that came with the kit.

Technician's Signature _____

Date _____

POST-INSTALLATION CHECKLIST

- ❑ Overnight leak down test — Recheck air pressure after the vehicle has been used for 24 hours. If the pressure has dropped more than 5 PSI, then there is a leak that must be fixed. Either fix the leak yourself or return to the installer for service.
- ❑ Air pressure requirements — Regardless of load, the air pressure should always be adjusted to maintain adequate ride height at all times while driving.
- ❑ Thirty day or 500 mile test — Recheck the air spring system after 30 days or 500 miles, whichever comes first. If any part shows signs of rubbing or abrasion, the source should be identified and moved, if possible. If it is not possible to relocate the cause of the abrasion, the air spring may need to be remounted. If professionally installed, the installer should be consulted. Check all fasteners for tightness.

Product Use, Maintenance and Servicing

Suggested Driving Air Pressure	Maximum Air Pressure
80 PSI	125 PSI
FAILURE TO MAINTAIN ADEQUATE MINIMUM PRESSURE (OR PRESSURE PROPORTIONAL TO LOAD) WILL RESULT IN BOTTOMING OUT, OVER-EXTENSION OR RUBBING AGAINST ANOTHER COMPONENT AND WILL **VOID THE WARRANTY**.	

MAINTENANCE GUIDELINES

NOTE *By following these steps, vehicle owners will obtain the longest life and best results from their air spring.*

1. Check the air pressure before driving.
2. Never inflate beyond 125 PSI.
3. If you develop an air leak in the system, use a soapy water solution to check all air line connections, before deflating and removing the spring.
4. When increasing load, always adjust the air pressure to maintain normal ride height. Increase or decrease pressure from the system as necessary to attain normal ride height for optimal ride and handling. Remember that loads carried behind the axle (including tongue loads) require more leveling force (pressure) than those carried directly over the axle.

⚠ CAUTION FOR YOUR SAFETY AND TO PREVENT DAMAGE TO YOUR VEHICLE, DO NOT EXCEED MAXIMUM GROSS VEHICLE WEIGHT RATING (GVWR), AS INDICATED BY THE VEHICLE MANUFACTURER. ALTHOUGH YOUR AIR SPRINGS ARE RATED AT A MAXIMUM INFLATION PRESSURE OF 125 PSI, THE AIR PRESSURE ACTUALLY NEEDED IS DEPENDENT ON YOUR LOAD.

5. Always add air to the springs in small quantities, checking the pressure frequently. Sleeves require less air volume than a tire and inflate quickly.
6. Should it become necessary to raise the vehicle by the frame, make sure the control system is turned off before lifting.

Troubleshooting Guide

1. Leak test the air line connections, the threaded connection into the air spring, and all fittings in the control system.
2. Inspect the air lines to be sure none are pinched. Tie straps may be too tight. Loosen or replace the strap and replace leaking components.
3. Inspect the air line for holes and cracks. Replace as needed.
4. Look for a kink or fold in the air line. Reroute as needed.

If the preceding steps do not solve the problem, it is possibly caused by a failed air spring — either a factory defect or an operating problem. Please call Air Lift at (800) 248-0892 for assistance.

Frequently Asked Questions

Q. Will installing air springs increase the weight ratings of a vehicle?
No. Adding air springs will not change the weight ratings (GAWR, GCWR and/or GVWR) of a vehicle. Exceeding the GVWR is dangerous and voids the Air Lift warranty.

Q. How long should air springs last?
If the air springs are properly installed and maintained they can last indefinitely.

Q. Will raising the vehicle on a hoist for service work damage the air springs?
No. The vehicle can be lifted on a hoist for short-term service work such as tire rotation or oil changes. However, if the vehicle will be on the hoist for a prolonged period of time, support the axle with jack stands in order to take the tension off of the air springs.

Tuning the Air Pressure

Pressure determination comes down to three things — level vehicle, ride comfort, and stability.

1. **Level vehicle**

   If the vehicle's headlights are shining into the trees or the vehicle is leaning to one side, then it is not level. Raise the air pressure to correct either of these problems and level the vehicle.

2. **Ride comfort**

   If the vehicle has a rough or harsh ride it may be due to either too much pressure or not enough. Try different pressures to determine the best ride comfort. See Air Lift suggested driving air pressure.

3. **Stability**

   Stability translates into safety and should be the priority, meaning the driver may need to sacrifice a perfectly level and comfortable ride. Stability issues include roll control, bounce, dive during braking and sponginess. Tuning out these problems usually requires additional air pressure, strut damping, or both.

Checking for leaks

1. Inflate the air spring to 80 PSI.
2. Spray all connections and the inflation valves with a solution of 1/5 liquid dish soap and 4/5 water. Spot leaks easily by looking for bubbles in the soapy water.
3. After the test, deflate the springs to the minimum pressure required to restore the system to normal ride height.
4. Check the air pressure again after 24 hours. A 2-4 PSI loss after initial installation is normal. Retest for leaks if the loss is more than 5 PSI.

Fixing Leaks

1. If there is a problem with a swivel fitting:
   a. Check the air line connection by deflating the spring and removing the line by pulling the collar against the fitting and pulling firmly on the air line. Trim 1" off the end of the air line. Be sure the cut is clean and square (see Fig. 29). Reinsert the air line into the push-to-connect fitting.
   b. Check the threaded connection by tightening the swivel fitting another ½ turn. If it still leaks, deflate the air spring, remove the fitting, and re-coat the threads with thread sealant. Reinstall by hand tightening as much as possible and then use a wrench for an additional two turns.
2. If the preceding steps have not resolved the problem, call Air Lift customer service at (800) 248-0892.

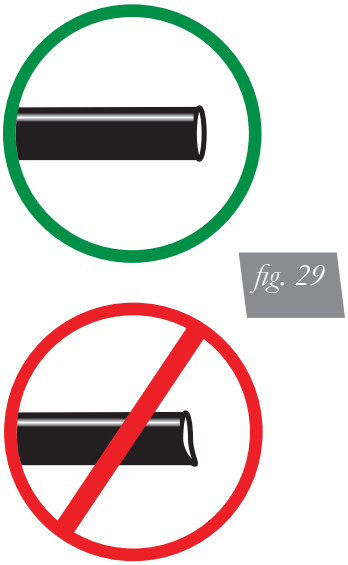

fig. 29

Limited Warranty and Return Policy

WHAT THIS WARRANTY COVERS

Air Lift Company provides a Limited Lifetime Warranty to the original purchaser of its Air Lift Performance 3H™ and 3P™ Control/Air Management Systems, that the Air Lift Performance products will be free from defects in workmanship and materials for the normal expected life of the part when used on cars and trucks as specified by Air Lift Company and under normal operating conditions, subject to the requirements and exclusions set forth below.

For all other Air Lift Performance products, Air Lift Company warrants to the original purchaser for a period of one year from the date of original purchase, that the Air Lift Performance products will be free from defects in workmanship and materials when used on cars and trucks as specified by Air Lift Company and under normal operating conditions, subject to the requirements and exclusions set forth below.

WHAT THIS WARRANTY DOES NOT COVER

The warranty does not apply to products that have been improperly applied, improperly installed or which have not been maintained in accordance with installation instructions furnished with all products. This warranty does not apply and is void if damage or failure is caused by: accident, abuse, misuse (including but not limited to racing or off-road activities or commercial use), abnormal use, faulty installation, liquid contact, fire, earthquake or other external cause; operating the product outside Air Lift Company's instructions, specifications or guidelines; or service, alteration, maintenance or repairs performed by anyone other than Air Lift Company to the product from its purchased condition. This warranty also does not apply to: Universal Air (Fabricator Kits), consumable parts, such as batteries; cosmetic damage, including but not limited to scratches or dents; defects caused by normal wear and tear or otherwise due to the normal aging of the product, or if any serial or identification number has been removed or defaced from the product. Air Lift Company reserves the right to change the design of any product without assuming any obligation to modify any product previously manufactured.

LIMITATION OF LIABILITY

To the extent permitted by law, this warranty and the remedies set forth herein are exclusive and in lieu of all other warranties, remedies and conditions, whether oral, written, statutory, express or implied. AIR LIFT COMPANY DISCLAIMS ALL STATUTORY AND IMPLIED WARRANTIES, INCLUDING WITHOUT LIMITATION, WARRANTIES OF MERCHANTABILITY AND FITNESS FOR A PARTICULAR PURPOSE AND WARRANTIES AGAINST HIDDEN OR LATENT DEFECTS TO THE EXTENT PERMITTED BY LAW. To the extent such warranties cannot be disclaimed, such implied warranties shall apply only for the warranty period specified above. Please note that some states do not allow limitation on how long an implied warranty (or condition) lasts. So the above limitation may not apply to you.

Except as provided in this warranty and to the extent permitted by law, Air Lift Company shall not be liable for any direct, special, incidental or consequential damages resulting from any breach of warranty or condition, or arising in connection with the sale, use or repair of Air Lift products, or under any other legal theory, including but not limited to loss of use, loss of revenue, loss of actual or anticipated profits, loss of the use of money, loss of business, loss of opportunity, loss of goodwill, and loss of reputation. Air Lift Company's maximum liability shall not in any case exceed the purchase price paid by you for the Air Lift product. Please note that some states do not allow the exclusion or limitation of incidental or consequential damages, so the above limitation or exclusion may not apply to you.

HOW TO GET SERVICE

If a defect in workmanship or materials causes your Air Lift Performance product to become inoperable within the warranty period, before returning any defective product, call Air Lift Company at (800) 248-0892 in the U.S. and Canada (elsewhere, (517) 322-2144) to obtain a Returned Materials Authorization (RMA) number. The consumer shall be responsible for removing (labor charges) the defective product from the vehicle and returning it, shipping costs prepaid, to Air Lift Company for verification. Returns to Air Lift Company must be postage prepaid and sent to: Air Lift Company • 2727 Snow Road • Lansing, MI • 48917. You must prove to the satisfaction of Air Lift Company the date of original purchase of your Air Lift Performance product. You must also enclose the RMA number and a return address. A minimum $10 shipping and handling charge will apply to all warranty claims. You must also pack the product to minimize the risk of it being damaged in transit. If we receive a product in damaged condition as the result of shipping, we will notify you and you must seek a claim with the shipper.

WHAT AIR LIFT COMPANY WILL DO

If you submit a valid claim to Air Lift Company during the warranty period, Air Lift Company will, at its option, repair your Air Lift Performance product or furnish you with a new or rebuilt product. Air Lift Company will not reimburse you for repairs or replacement parts provided by other parties. Your repaired or replacement Air Lift Performance product will be returned to you (subject to payment of the required warranty claim shipping and handling charge) and it will be covered under the warranty for the balance of the warranty period, if any. When a product or part is replaced, any replacement item becomes your property and the replaced item becomes property of Air Lift Company. You are responsible for installation/reinstallation (labor charges) of the product.

HOW THE LAW RELATES TO THIS WARRANTY

This warranty gives you specific legal rights and you may also have other rights which vary from state to state. By this warranty, Air Lift Company does not limit or exclude your rights except as allowed by law. To fully understand your rights, you should consult the laws of your state.

Notes

Need Help?

Contact our customer service department by calling (800) 248-0892. For calls from outside the USA or Canada, our local number is (517) 322-2144.

Thank you for purchasing Air Lift Performance products!

Air Lift Performance • 2727 Snow Road • Lansing, MI 48917 or PO Box 80167 • Lansing, MI 48908-0167
Toll Free (800) 248-0892 • Local (517) 322-2144 • Fax (517) 322-0240 • www.airliftperformance.com

Printed in
the USA