Kits 78555 78568

BMW F22/F23/F30/
F31/F32/F33/F36
3-bolt/5-bolt upper mount

Front Application

INSTALLATION GUIDE

For maximum effectiveness and safety, please read these instructions completely before proceeding with installation.

Failure to read these instructions can result in an incorrect installation.

MN-1019 • (021803) • ERN 8913

TABLE OF CONTENTS

A. Introduction 2
Notation Explanation 2

B. Important Safety Notices 2

C. Installation Diagram 3
Hardware List 3

D. Installing the Air Suspension 4
Removing the Suspension 4
Installing the Kit Components 7
Routing the Air Lines 9

E. Tips for Installing the Air Lines 10
Cutting Air Lines 10
Push-to-Connect (PTC) Fittings 10
Checking for Leaks 10
Fixing Leaks 10

F. Before Operating 11
Setting the Ride Height 11
Torque Specifications 11
Suggested Driving Air Pressure and Maximum Air Pressure 11
Check for Binding 12
Damping Adjustment 12
Aligning the Vehicle 12
Adjusting Extended or Drop Height Using Lower Mount 13
Installation Checklist 15
Post-Installation Checklist 15

G. Use, Maintenance and Servicing 16
Tuning the Air Pressure 16
Troubleshooting Guide 16

Limited Warranty and Return Policy 17

Replacement Part Information 17

Contact Information 17

A. Introduction

Air Lift Performance thanks you for purchasing the most complete, fully engineered high-performance air suspension made for the BMW F22, F23, F30, F31, F32, F33 and F36. Read these installation instructions to correctly and safely set up the vehicle for a #lifeonair.

Air Lift assumes that the installer has the mechanical knowledge and ability to work on vehicle suspension systems and has basic tools necessary to complete the project. Special tools needed to complete the installation are noted on the Installation Diagram page.

Air Lift reserves the right to makev changes and improvements to its products and publications at any time. For the latest version of this manual, contact Air Lift Performance at **(800) 248-0892** or visit **www.airliftperformance.com**.

An Air Lift Performance air management system is highly recommended for this product. Learn more at **air-lift.co/productlines**.

NOTATION EXPLANATION

Hazard notations appear in various locations in this publication. Information which is highlighted by one of these notations must be observed to help minimize risk of personal injury or possible improper installation which may render the vehicle unsafe. Notes are used to help emphasize areas of procedural importance and provide helpful suggestions. The following definitions explain the use of these notations as they appear throughout this guide.

DANGER — INDICATES IMMEDIATE HAZARDS WHICH WILL RESULT IN SEVERE PERSONAL INJURY OR DEATH.

WARNING — INDICATES HAZARDS OR UNSAFE PRACTICES WHICH COULD RESULT IN SEVERE PERSONAL INJURY OR DEATH.

CAUTION — INDICATES HAZARDS OR UNSAFE PRACTICES WHICH COULD RESULT IN DAMAGE TO THE MACHINE OR MINOR PERSONAL INJURY.

NOTE — *Indicates a procedure, practice or hint which is important to highlight.*

B. Important Safety Notices

WARNING — DO NOT INFLATE AIR SPRINGS WHILE OFF OF THE VEHICLE. DAMAGE TO ASSEMBLY MAY RESULT AND VOID WARRANTY.

CAUTION — DO NOT WELD TO OR MODIFY PERFORMANCE STRUTS/SHOCKS IN ANY WAY. DAMAGE TO UNIT MAY OCCUR AND WILL VOID WARRANTY.

WARNING — AFTER INSTALLATION, ENSURE ALL ORIGINAL EQUIPMENT VEHICLE SAFETY FEATURES ARE PROPERLY CALIBRATED BY A QUALIFIED TECHNICIAN. CHANGING VEHICLE HEIGHT MAY AFFECT FUNCTIONING OF SAFETY SENSORS AND CAMERAS.

C. Installation Diagram

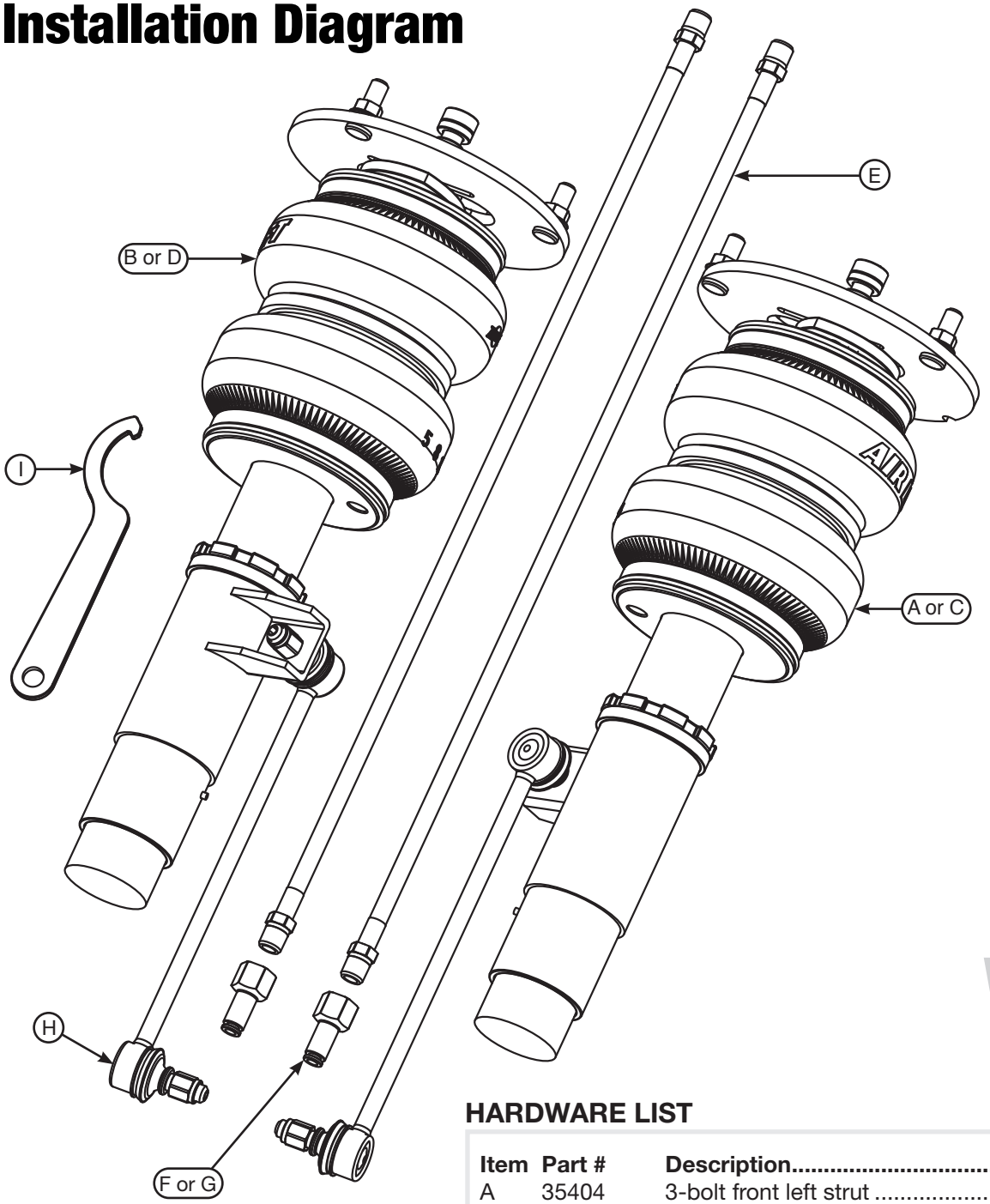

fig. C.1

HARDWARE LIST

Item	Part #	Description	Qty
A	35404	3-bolt front left strut	1
B	35405	3-bolt front right strut	1
C	35427	5-bolt front left strut	1
D	35426	5-bolt front right strut	1
E	20997	Leader hose, 1/4” ID	2
F	21987	Union, 1/4” FNPT x 3/8” PTC, DOT	2
G	21810	Union, 1/4” FNPT x 1/4” PTC, DOT	2
H	26827-009	End link (pair)	1
I	11289	Spanner wrench	1

NOTE *The photos in this manual show the 3-bolt upper mount.*

STOP! Missing or damaged parts? Call Air Lift customer service at (800) 248-0892 for a replacement part.

D. Installing the Air Suspension

NOTE *See important safety notices on page 2.*

REMOVING THE SUSPENSION

NOTE *BMW recommends replacing all loosened factory fasteners – other than wheel bolts.*

1. Elevate and support the vehicle using its approved lifting points. Remove the front wheel (Figs. D.1 & D.2).

fig. D.1

fig. D.2

2. On vehicles with headlight alignment systems, disconnect the linkage from the control arm (Figs. D.3 & D.4)

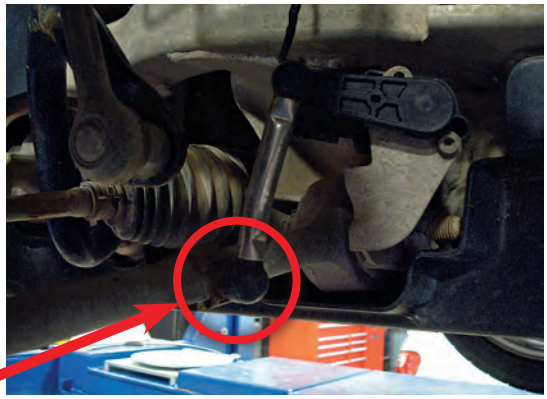

fig. D.3

Headlight alignment bracket

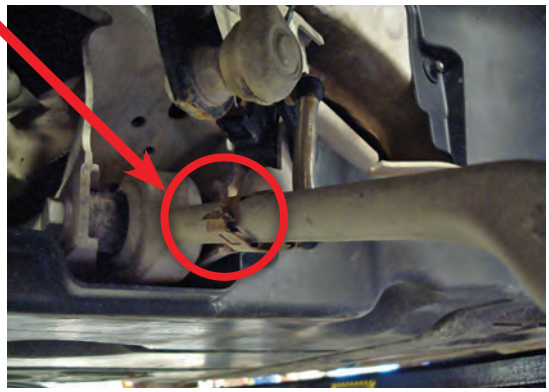

fig. D.4

3. Remove stabilizer bar end link (Figs. D.5, D.6 & D.7).

fig. D.5

fig. D.6

fig. D.7

4. Loosen both lower control arm pivot bushing bolts that are fastened to the subframe (Figs. D.8 & D.9).

fig. D.8

fig. D.9

5. Support the hub and remove the lower strut pinch bolt (Figs. D.10 & D.11). Unclip the attached brake line bracket from the knuckle (Fig. D.12).

fig. D.10

fig. D.11

fig. D.12

6. Within the engine compartment, remove the plastic cover, exposing the support bearing bolts. Remove the strut brace bolt and the three support bearing bolts (Figs. D.13, D.14 & D.15).

fig. D.13

3-bolt upper mount shown.

fig. D.14

fig. D.15

7. Lower the hub and remove the strut from the vehicle (Fig. D.16).

fig. D.16

INSTALLING THE KIT COMPONENTS

1. Begin by installing the leader hose into the air spring. Tighten the appropriate fitting to the air line (1 3/4 turns beyond hand-tight). Tighten the leader hose into the air spring 1 3/4 turns beyond hand-tight (Fig. D.17).

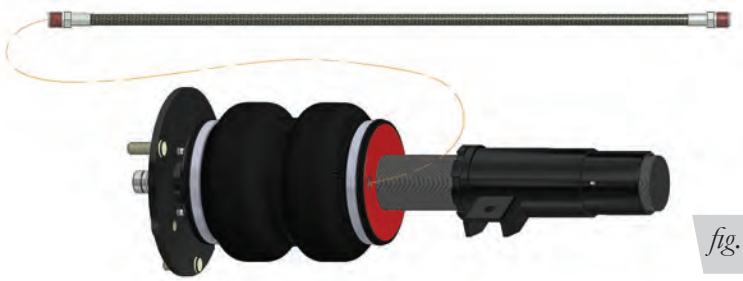

fig. D.17

2. Insert and fully seat the strut into the steering knuckle (Fig. D.18).

fig. D.18

3. Lift the knuckle assembly and align the camber plate into the upper mounting position. Torque camber plate M10 nuts (3-bolt) to 56Nm (41 lb.-ft.) + 90 degrees or M8 (5-bolt) nuts to 30Nm (22lb.-ft.) + 90 degrees (Figs. D.19 & D.20).

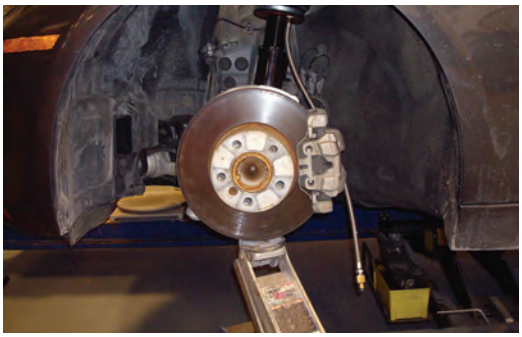

fig. D.19

fig. D.20

⚠ CAUTION

TORQUE-TO-YIELD BOLTS ARE DESIGNED TO BE REPLACED AFTER THEY HAVE BEEN LOOSENED.

4. Attach the strut tower brace to the camber plate. Torque bolt to 56Nm (41 lb.-ft.) + 90 degrees. Reinstall the plastic cover (Fig. D.21).

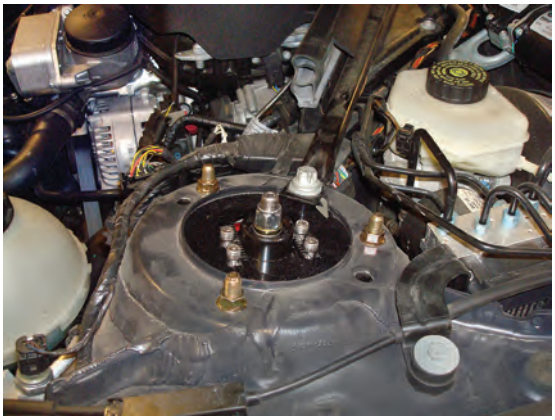

fig. D.21

5. Clip the brake line tab back into position on the knuckle. Insert the lower strut pinch bolt. Torque to 44Nm (32 lb.-ft.) + 90 degrees (Figs. D.22 & D.23).

fig. D.22

fig. D.23

6. Attach the supplied stabilizer end link (H) to the strut and stabilizer bar. Torque nuts to 56Nm (41 lb.-ft.) (Figs. D.24 & D.25).

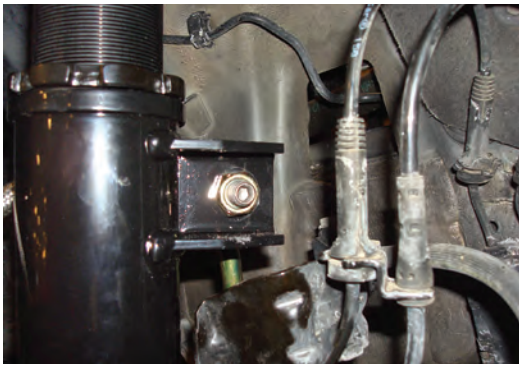

fig. D.24

fig. D.25

ROUTING THE AIR LINES

1. Fully compress the suspension using a jack. With the suspension compressed, review the best routing for the leader hose that is clear of all suspension and steering components.
2. Routing should allow for the suspension to extend and steer without kinking, pulling the line tight or rubbing on other components. Following the brake line routing is often a good place to start. Check clearances to all other components.

⚠ WARNING

AFTER INSTALLATION, ENSURE ALL ORIGINAL EQUIPMENT VEHICLE SAFETY FEATURES ARE PROPERLY CALIBRATED BY A QUALIFIED TECHNICIAN. CHANGING VEHICLE HEIGHT MAY AFFECT FUNCTIONING OF SAFETY SENSORS AND CAMERAS.

E. Tips for Installing the Air Lines

CUTTING AIR LINES

When cutting air lines, use a sharp knife or a hose cutter and make clean, square cuts (Fig. E.1). Do not use scissors or wire cutters because these tools will deform the air line, causing it to leak around fittings. Do not cut the lines at an angle.

The minimum bend radius for 1/4” air line is 1” (25mm). The minimum bend radius for 3/8” air line is 1 1/2” (38mm). Do not bend the air line less than the minimum bend radius or side load the fitting connections. Air lines are to be installed straight into fittings.

Inspect the air line for scratches that run lengthwise prior to installation. Contact Air Lift customer service at **(800) 248-0892** if the air line is damaged.

fig. E.1

To watch a video demonstrating proper air line cutting, go to **air-lift.co/cuttingairline**

PUSH-TO-CONNECT (PTC) FITTINGS

Air lines should be pushed into the push-to-connect fittings firmly, with a slight side-to-side rotational twist. Check the connection by pulling on each line to verify a robust connection.

NOTE

To release the air line from the connection (Fig. E.2), first release all air from the system. Push in on the air line (step 1), push the collar in (step 2), and with the collar depressed, pull the air line out of the fitting (step 3).

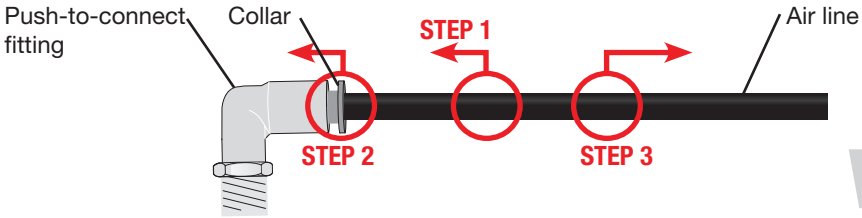

fig. E.2

CHECKING FOR LEAKS

1. Inflate the air spring to 75-90 PSI (5.2-6.2BAR).
2. Spray all connections with a solution of liquid dish soap and water. Spot leaks easily by looking for bubbles in the soapy water.
3. After the test, deflate the springs to the minimum pressure required to restore the system to normal ride height.
4. Check the air pressure again after 24 hours. A 2-4 PSI (.14-.28BAR) loss after initial installation is normal. Retest for leaks if the loss is more than 5 PSI (.34BAR).

FIXING LEAKS

1. If there is a problem with the push-to-connect fitting, remove the air line as described above. Trim 1” (25mm) off the end of the air line. Be sure the cut is clean and square (see Fig. E.1).
2. Reinsert the air line into the push-to-connect fitting as described above.

F. Before Operating

SETTING THE RIDE HEIGHT

1. With the suspension fully compressed, take a measurement from the fender to a chosen reference point – typically the center of the axle. Record this measurement as max compression (MC).
2. Cycle the suspension to max extension (ME) and record the measurement from the fender to the same reference point.
3. Add ME and MC, then divide the total by 2. Set the suspension to this point. This position will give 50% stroke in either direction and is a starting point for ride height (Fig. F.1).

Formula for Calculating Ride Height
(ME+MC)÷2=MID STROKE

fig. F.1

4. With the suspension at this position, loosen, then re-torque all suspension bushing pivot joint fasteners to the manufacturer's specifications (Table 1):

Torque Specifications			
Location	TTY*	Nm	Lb.-ft.
Camber plates to chassis M10 (3-bolt)	✓	56 + 90 degrees	41 + 90 degrees
Camber plates to chassis M8 (5-bolt)	✓	30 + 90 degrees	22 + 90 degrees
Camber plate to tower brace bolt	✓	56 + 90 degrees	41 + 90 degrees
Lower pinch bolts	✓	44 + 90 degrees	32 + 90 degrees
Stabilizer end link nuts		56	41
Forward lower control arm to subframe pivot bolt	✓	100 + 90 degrees	74 + 90 degrees
Rearward lower control arm to subframe pivot bolt	✓	100 + 90 degrees	74 + 90 degrees
Camber adjustment bolts		10	7
Strut locking collar		Tighten with significant force	
Braided hose/fitting		1 3/4 turns beyond hand tight	
Wheel bolts		140	103

* Torque-to-yield bolts

Table 1

⚠ CAUTION

TORQUE-TO-YIELD BOLTS ARE DESIGNED TO BE REPLACED AFTER THEY HAVE BEEN LOOSENED.

Suggested Driving Air Pressure	Maximum Air Pressure
35-50 PSI (2.4-3.5BAR)	**125 PSI (8.6BAR)**
FAILURE TO MAINTAIN ADEQUATE MINIMUM PRESSURE (OR PRESSURE PROPORTIONAL TO LOAD) MAY RESULT IN EXCESSIVE BOTTOMING OUT AND **WILL VOID THE WARRANTY**.	

Table 2

CHECK FOR BINDING

1. Inflate and deflate the system (do not exceed 125 PSI [8.6BAR]) to check for clearance or binding issues. With the air springs deflated, check clearances on everything so as not to pinch brake lines, vent tubes, etc. Clear lines if necessary.
2. Inflate the air springs to 75-90 PSI (5.2-6.2BAR) and check all connections for leaks.

⚠ CAUTION

MAKE SURE THE FRONT WHEELS ARE STRAIGHT WHEN DEFLATING AND REINFLATING AIR BAGS.

DAMPING ADJUSTMENT

Suspension damping is a matter of compromise. Setting it too stiff will make the ride feel jarring. In addition, if the suspension is too stiff, the tires will lose contact with the road, reducing control and power delivery. On the other hand, if the suspension is too soft, the car can experience brake dive and excessive bouncing. The sweet spot lies somewhere in the middle. Air Lift dampers have a range of adjustment, which allows the driver to tune the ride and handling to his or her preferences.

Air Lift recommends damper and air pressure settings for every vehicle kit, but it is impossible to consider every situation. For example, even though Air Lift kits replace the dampers and springs, vehicles with sport-tuned suspensions might have stiffer bushings, larger anti-roll bars, bigger wheels, wider tires, etc. These settings may need to be adjusted to different vehicles and driving characteristics.

1. The dampers in this kit have 30 settings, or “clicks,” of adjustable compression and rebound damping characteristics. Damping is changed through the damper rod using the supplied adjuster (Figs. F.2 & F.3) or an 3mm hex key (not included).
2. Turn the adjuster clockwise (H) and the damping settings are hardened, reducing oscillations and body motion. Turn the adjuster counterclockwise (S) and the damping is softened.
3. Each damper in this kit is preset to “-18 clicks.” This means that the damper is adjusted 18 clicks away from full stiff, which starts at 0. Counting up from full stiff is the preferred method of keeping track of, or setting, damping. This setting was developed on a 2012 BMW 328i.

fig. F.2

fig. F.3

ALIGNING THE VEHICLE

1. Set the vehicle to the height at which it will most often be driven.
2. If the ride height is lower than stock, Air Lift Performance recommends loosening all pivot points (bolts, nuts) on any control arm, strut arm or radius rod that contains bushings. Once they have been loosened, re-torque to stock specifications (Table 1).

NOTE

It may be necessary to cycle the suspension to loosen the bushing from its mount. This will help re-orient the bushing at its new position based on the chosen ride height.

3. Get a shop alignment of the vehicle at the new chosen ride height.

ADJUSTING EXTENDED OR DROP HEIGHT USING LOWER MOUNT

These dampers have been pre-set at the factory to provide maximum drop height while maintaining adequate tire clearance to the air spring. If you wish to gain more extended height (lift), which is the same as reducing drop height, or want to lower the chassis further and there is still adjustment available at the lower mount, please use the following procedure:

1. Support the vehicle with jack stands or a hoist at approved lifting points.
2. Remove the wheel.
3. Using the supplied spanner wrench, loosen the locking collar (Fig. F.4).

The dampers in this kit may look different, but they all allow adjustment of the locking collar with the included spanner wrench.

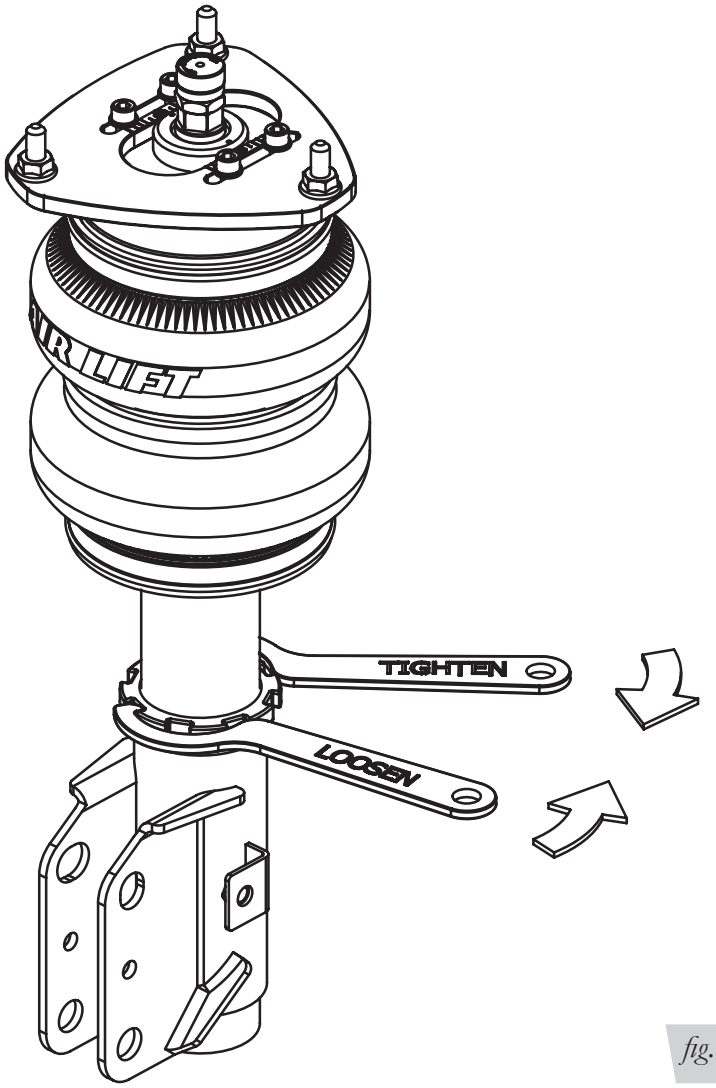

fig. F.4

4. Deflate the air spring to 0 pressure on the corner you are adjusting.
5. Disconnect lower mount from suspension.
6. Spin the lower mount to the desired location.

NOTE *Not all vehicles will have further drop height available.*

7. Re-install lower mount to suspension and torque fasteners.
8. Tighten the lower locking collar to the lower mount using significant force.

⚠ CAUTION

WHEN ADJUSTING HEIGHT UPWARD, MAKE SURE THAT THE DAMPER BODY ENGAGES ALL THE THREADS OF THE LOWER MOUNT (FIG. F.5). WHEN ADJUSTING DOWNWARD, MAKE SURE THERE IS ADEQUATE AIR SPRING CLEARANCE TO THE TIRE/WHEEL ASSEMBLY. CLEARANCE MUST BE CHECKED WITH SYSTEM FULLY DEFLATED AS WELL AS FULLY INFLATED TO ENSURE THAT NO RUBBING OCCURS. FAILURE TO MAINTAIN ADEQUATE CLEARANCE CAN RESULT IN AIR SPRING FAILURE AND WILL NOT BE COVERED UNDER WARRANTY.

⚠ CAUTION

DO NOT ADJUST HEIGHT BY SPINNING AIR SPRING ON DAMPER! DOING SO MAY CAUSE AN AIR LEAK AND COMPROMISE THE ASSEMBLY.

FOR STRUTS:

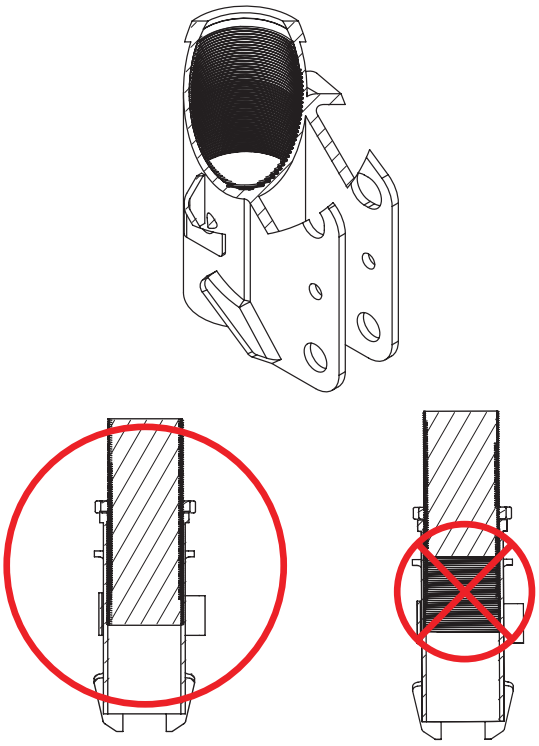

OK, no threads showing.

Not OK, threads are showing.

FOR SHOCKS:

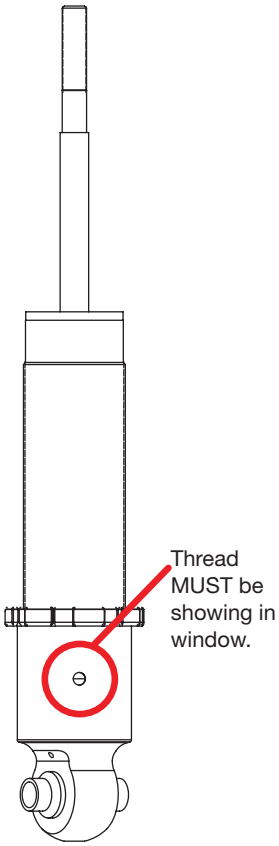

fig. F.5

INSTALLATION CHECKLIST

☐ **Clearance** — Inflate the air springs to 75-90 PSI (5.2-6.2BAR) and make sure there is at least 13mm (1/2”) clearance from anything that might rub against the air spring. This should be checked with the air spring fully inflated and fully deflated.

☐ **Leak** — Inflate the air springs to 75-90 PSI (5.2-6.2BAR) and check all connections for leaks. All leaks must be eliminated before the vehicle is road tested.

☐ **Heat** — Be sure there is sufficient clearance from heat sources, at least 152mm (6”) from air springs and air lines. If a heat shield was included in the kit, install it. If there is no heat shield, but one is required, call Air Lift customer service at **(800) 248-0892**.

☐ **Fastener** — Recheck all bolts for proper torque.

☐ **Road** — Inflate the springs to recommended driving pressures (Table 2). Drive the vehicle 16km (10 miles) and recheck for clearance, loose fasteners and air leaks.

☐ **Operating instructions** — If professionally installed, the installer should review the operating instructions with the owner. Be sure to provide the owner with all paperwork that came with the kit.

POST-INSTALLATION CHECKLIST

☐ **Overnight leak down test** — Recheck air pressure 24 hours after installation and driving of the vehicle. If the pressure has dropped more than 5 PSI (.34BAR), there is a leak that must be fixed.

☐ **Air pressure requirements** — It is important to understand the air pressure requirements of the air spring system. Regardless of load, the air pressure should always be adjusted to maintain adequate ride height at all times while driving.

☐ **Thirty-day or 800km (500 mile) test** —Recheck the air spring system after 30 days or 800km (500 miles), whichever comes first. If any part shows signs of rubbing or abrasion, the source should be identified and moved, if possible. If it is not possible to relocate the cause of the abrasion, the air spring may need to be remounted. If professionally installed, the installer should be consulted. Check all fasteners for tightness.

G. Use, Maintenance and Servicing

1. An Air Lift air management system is strongly recommended for this product, but it is possible to operate without one. The air lines can be routed to Schrader valves for use with a separate air compressor. Air lines and Schrader valves are not included with Air Lift Performance kits and would need to be purchased separately. To learn more about Air Lift air management systems visit **air-lift.co/productlines**.
2. Check the air pressure before driving.

⚠ WARNING

BEFORE SERVICING THE VEHICLE, MAKE SURE TO TURN OFF "RISE ON START" AND "PRESET MAINTAIN." THIS WILL ELIMINATE ANY UNINTENDED SUSPENSION CYCLING IF YOU NEED TO TURN THE KEY ON IN THE VEHICLE FOR ANY REASON.

TUNING THE AIR PRESSURE

Pressure determination comes down to three things — level vehicle, ride comfort and stability.

1. **Level vehicle**
   Depending on load, it is possible one side will need more pressure than the other to level the vehicle.
2. **Ride comfort**
   If the vehicle has a harsh ride, it may be due to either too much pressure or not enough causing frequent bottoming. Also, riding the vehicle at the top, or close to the top of the available stroke will cause an uncomfortable ride due to a lack of rebound travel. This situation should be avoided for driving any significant distance. Try different pressures to determine the best ride comfort. See the Air Lift suggested driving air pressure for this vehicle (Table 2).
3. **Stability**
   Stability translates into safety and should be the priority, meaning the driver may need to sacrifice a perfectly level and comfortable ride. Stability issues include roll control, bounce, dive during braking and sponginess. Tuning out these problems usually requires additional air pressure, damping or both.

TROUBLESHOOTING GUIDE

PROBLEM	CAUSE	SOLUTION
Air spring won't maintain pressure.	Leak at fitting, air line not cut properly or damage to air line during installation.	Find location of leak by spraying listed components with soapy water solution and look for bubbles. Tighten air fitting, re-cut air line or replace damaged components.
	Leak at lower O-ring on damper if air spring is over the damper.	Spray bottom of air spring with soapy water solution and look for bubbles. Contact Air Lift customer service at **(800) 248-0892** to determine if component should be replaced.
Knocking noise when hitting bumps.	Loose suspension component such as locking collar on damper or loose rod nut.	Tighten lower locking collar with significant force, check and tighten suspension components to factory specs at desired ride height.
	Driving vehicle too close to maximum extension.	Check current ride height and compare to maximum height. If there is less than 25mm (1") difference, reduce air pressure to lower ride height.
		Lengthen strut or shock to increase available up travel.
Suspension bottoms out.	Air pressure is too low, causing air springs to bottom out.	Raise air pressure.
The ride is too bouncy.	Air pressure is too high, causing air springs to be too stiff.	Lower air pressure and adjust damper length if necessary to achieve proper ride height.
	Damping is inadequate.	Increase damping with adjusters.
The ride is too soft or floaty.	Damping is inadequate.	
The ride is too harsh.	Excessive damping.	Reduce damping with adjusters.

Limited Warranty and Return Policy

Air Lift Company provides a 1-year limited warranty to the original purchaser of Air Lift Performance damper kits from the date of original purchase, that the products will be free from defects in workmanship and materials when used on vehicles as specified by Air Lift Company and under normal operating conditions, subject to the requirements and exclusions set forth in the full Limited Warranty and Return Policy that is available online at **www.airliftperformance.com/warranty**.

For additional warranty information contact Air Lift Company customer service.

Replacement Part Information

If replacement parts are needed, contact the local dealer or call Air Lift customer service at **(800) 248-0892**. Most parts are immediately available and can be shipped the same day.

Contact Air Lift Company customer service at (800) 248-0892 first if:

- Parts are missing from the kit.
- Need technical assistance on installation or operation.
- Broken or defective parts in the kit.
- Wrong parts in the kit.
- Have a warranty claim or question.

Contact the retailer where the kit was purchased:

- If it is necessary to return or exchange the kit for any reason.
- If there is a problem with shipping if shipped from the retailer.
- If there is a problem with the price.

Contact Information

Mailing address	P.O. Box 80167 Lansing, MI 48908-0167
Shipping address for returns	2727 Snow Road Lansing, MI 48917
Phone	Toll free: (800) 248-0892 International: (517) 322-2144
Email	service@airliftcompany.com
Web address	www.airliftcompany.com

Air Lift Company reserves the right to make changes and improvements to its products and publications at any time. For the latest version of this manual, contact Air Lift Company at **(800) 248-0892** or visit **www.airliftperformance.com**.

Need Help?

Contact Air Lift Company customer service department by calling (800) 248-0892. For calls from outside the USA or Canada, dial (517) 322-2144.

Connect by searching for **Air Lift Performance** *#LifeonAir*

Thank you for purchasing Air Lift Performance products!

Air Lift Performance • 2727 Snow Road • Lansing, MI 48917 or P.O. Box 80167 • Lansing, MI 48908-0167
Toll Free (800) 248-0892 • Local (517) 322-2144 • Fax (517) 322-0240 • www.airliftperformance.com

Printed in the USA
JJC-0218

California: ⚠WARNING: Cancer and Reproductive Harm – www.P65Warnings.ca.gov

Kit 78655

BMW F30

Rear Application

INSTALLATION GUIDE

For maximum effectiveness and safety, please read these instructions completely before proceeding with installation.

Failure to read these instructions can result in an incorrect installation.

MN-1020 • (011608) • ERN 8436

TABLE OF CONTENTS

A. Introduction 2
Notation Explanation 2

B. Important Safety Notices 2

C. Installation Diagram 3
Hardware List 3

D. Installing the Air Suspension 4
Removal of the Stock Suspension 4
Installing the Kit Components 6
Routing Air Lines 9

E. Tips for Installing Air Lines. 10
Cutting Air Lines 10
Push-to-Connect Fittings 10
Checking for Leaks 10
Fixing Leaks 10

F. Before Operating. 11
Setting the Ride Height 11
Torque Specifications 11
Suggested Driving Air Pressure and Maximum Air Pressure 11
Check for Binding. 12
Damping Adjustment 12
Aligning the Vehicle 12
Adjusting Extended or Drop Height Using Lower Mount 13
Installation Checklist 15
Post-Installation Checklist 15

G. Use, Maintenance and Servicing 16
Tuning the Air Pressure 16
Troubleshooting Guide 16

Limited Warranty and Return Policy 20

Replacement Part Information 21

Contact Information 21

A. Introduction

Air Lift Performance thanks you for purchasing the most complete, fully engineered high-performance air suspension made for the BMW F30. Read these installation instructions to correctly and safely set up the vehicle for a #lifeonair.

Air Lift assumes that the installer has the mechanical knowledge and ability to work on vehicle suspension systems and has basic tools necessary to complete the project. Special tools needed to complete the installation are noted on the Installation Diagram page.

Air Lift reserves the right to make changes and improvements to its products and publications at any time. For the latest version of this manual, contact Air Lift Performance at **(800) 248-0892** or visit **www.airliftperformance.com**.

An Air Lift Performance air management system is highly recommended for this product. Learn more at **air-lift.co/productlines**.

NOTATION EXPLANATION

Hazard notations appear in various locations in this publication. Information which is highlighted by one of these notations must be observed to help minimize risk of personal injury or possible improper installation which may render the vehicle unsafe. Notes are used to help emphasize areas of procedural importance and provide helpful suggestions. The following definitions explain the use of these notations as they appear throughout this guide.

DANGER — INDICATES IMMEDIATE HAZARDS WHICH WILL RESULT IN SEVERE PERSONAL INJURY OR DEATH.

WARNING — INDICATES HAZARDS OR UNSAFE PRACTICES WHICH COULD RESULT IN SEVERE PERSONAL INJURY OR DEATH.

CAUTION — INDICATES HAZARDS OR UNSAFE PRACTICES WHICH COULD RESULT IN DAMAGE TO THE MACHINE OR MINOR PERSONAL INJURY.

NOTE — *Indicates a procedure, practice or hint which is important to highlight.*

B. Important Safety Notices

WARNING — DO NOT INFLATE AIR SPRINGS WHILE OFF OF THE VEHICLE. DAMAGE TO ASSEMBLY MAY RESULT AND VOID WARRANTY.

CAUTION — DO NOT WELD TO OR MODIFY PERFORMANCE STRUTS/SHOCKS IN ANY WAY. DAMAGE TO UNIT MAY OCCUR AND WILL VOID WARRANTY.

C. Installation Diagram

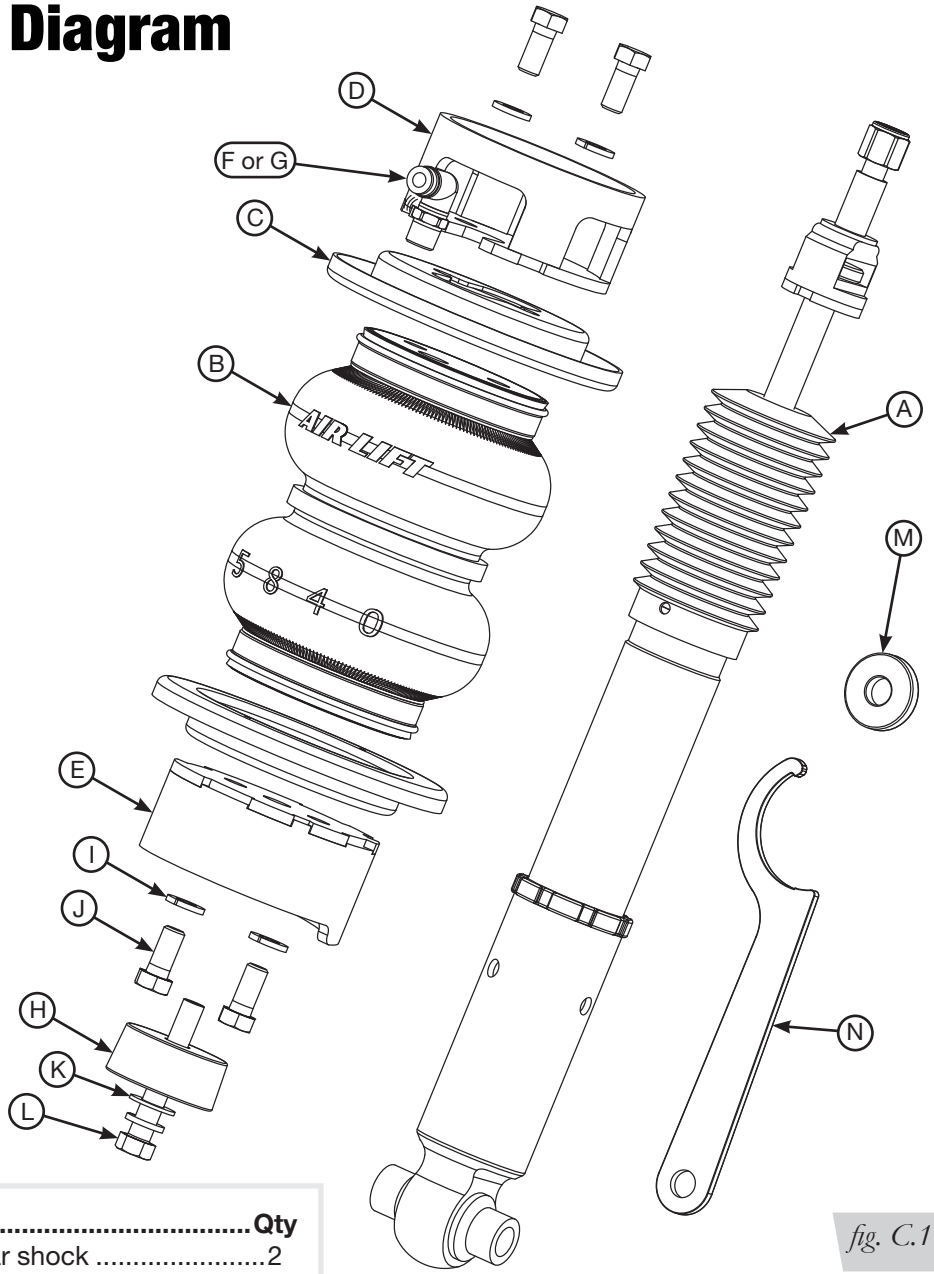

fig. C.1

HARDWARE LIST

Item	Part #	Description	Qty
A	26844	BMW F30 rear shock	2
B	58535	Air spring	2
C	11803	Roll plate	4
D	07969	Upper bracket	2
E	03969	Lower bracket	2
F	21851	Union, 1/4” MNPT X 3/8” elbow	2
G	21779	Union, 1/4” MNPT X 1/4” elbow	2
H	13993	Centering spacer	2
I	18427	3/8" Lock washer	10
J	17203	3/8"-24 x 7/8" Hex bolt	8
K	18444	3/8" Flat washer	2
L	17454	3/8"-24 x 2 1/2" Hex cap screw	2
M	13994	Toe link spacer	2
N		Spanner wrench	1

STOP! Missing or damaged parts? Call Air Lift customer service at (800) 248-0892 for a replacement part.

D. Installing the Air Suspension

REMOVAL OF THE STOCK SUSPENSION

NOTES

See important safety notices on page 2.

BMW recommends replacing all loosened factory fasteners – other than wheel bolts.

1. Elevate and support the vehicle using its approved lifting points. Remove the front wheel and support the hub assembly (Figs. D.1 & D.2).

fig. D.1

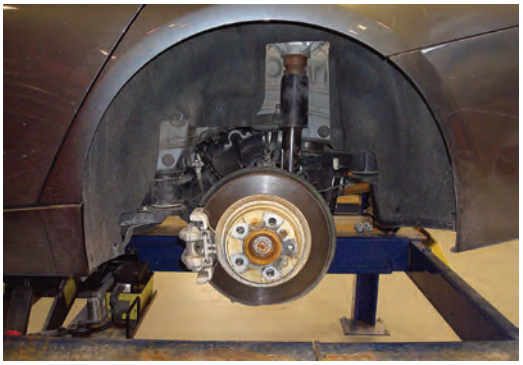

fig. D.2

2. Support the lower control arm (Figs. D.3 & D.4).

fig. D.3

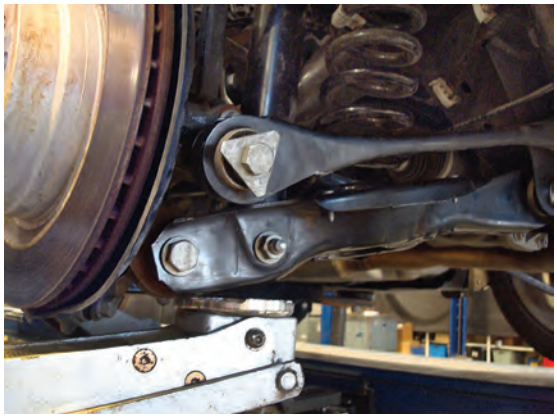

fig. D.4

DANGER

THE COIL SPRING IS UNDER COMPRESSION. THE COIL SPRING SHOULD BE REMOVED USING FACTORY PRESCRIBED GUIDELINES. SUPPORT THE HUB AND UNBOLT THE LOWER SHOCK EYE. REMOVE THE OUTER CONTROL ARM TO HUB BOLT (FIGS. D.5 & D.6).

fig. D.5

fig. D.6

3. Remove the coil spring (Fig. D.7). Reattach the control arm to the hub. Do not torque the bolt at this time (Fig. D.8).

fig. D.7

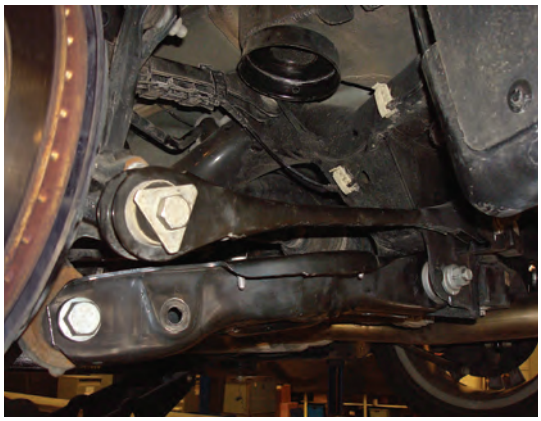

fig. D.8

4. Unbolt the shock assembly from the chassis (Fig. D.9).

fig. D.9

5. Disassemble the shock upper mount from the shock rod (Figs. D.10 & D.11).

fig. D.10

fig. D.11

6. Unthread the outer toe link bolt and remove (Fig. D.12).

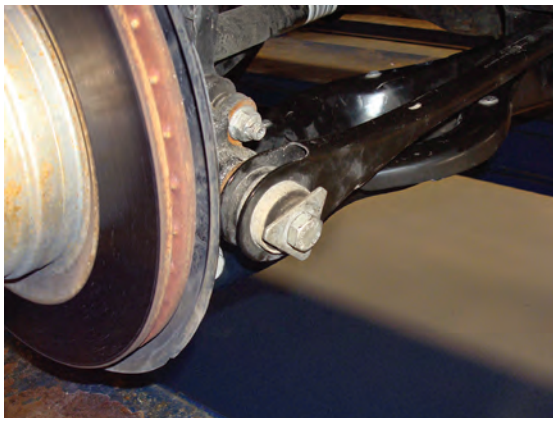

fig. D.12

INSTALLING THE KIT COMPONENTS

1. Install spacer between the toe link and hub. Reinstall bolt. Torque at desired ride height (Fig. D.13).

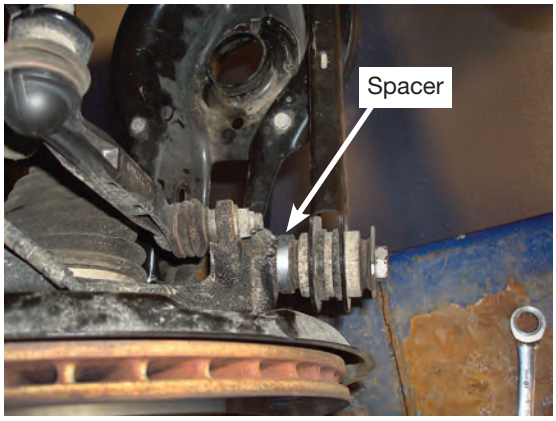

fig. D.13

2. Apply thread sealant to the fitting threads. Tighten the fitting into the air spring 1 3/4 turns beyond hand-tight (Fig. D.14).

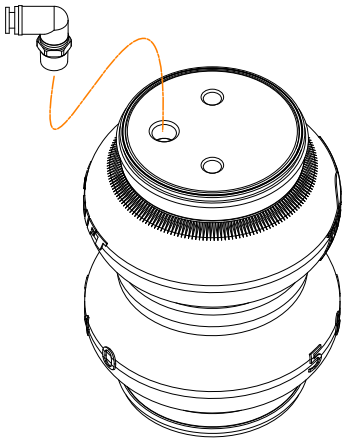

fig. D.14

3. Place the air spring assembly into the lower control arm. Rotate the assembly until the lower bracket is aligned with the coil spring seat (Figs. D.15 & D.16).

fig. D.15

fig. D.16

4. Insert the supplied centering spacer (H) through the bottom of the control arm and bolt the air spring assembly to the spacer (H) with hex cap scew (L) and lock washer (I) Torque to 27Nm (20 lb.-ft.) (Figs. D.17 & D.18).

fig. D.17

fig. D.18

5. Attach upper shock mount to the supplied shock. Torque the rod nut to 38Nm (28 lb.-ft.) (Fig. D.19).

fig. D.19

6. Align the shock upper mount to the chassis and install the three upper mount bolts. Torque to 28Nm (21 lb.-ft.) (Fig. D.20).

fig. D.20

7. Lift the hub assembly, aligning the shock eye, and install the lower shock bolt. Torque at desired ride height (Fig. D.21).

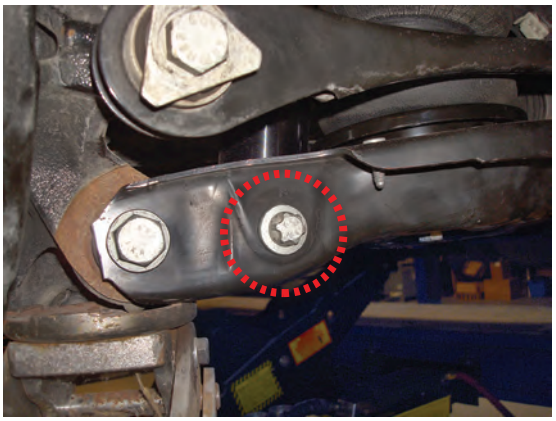

fig. D.21

8. Align the upper bracket into upper spring seat (Fig. D.22).

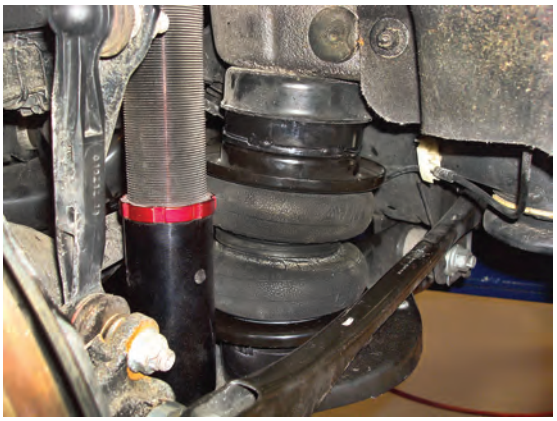

fig. D.22

ROUTING THE AIR LINES

1. Fully compress the suspension using a jack. With the suspension compressed, review the best routing for the air line that is clear of all suspension components and axle.
2. Routing should also allow for the suspension to extend without kinking or pulling the line tight or rubbing on other components. Following the brake line routing is often a good place to start. Check clearances to all other components.

E. Tips for Installing the Air Lines

CUTTING AIR LINES

When cutting air lines, use a sharp knife or a hose cutter and make clean, square cuts (Fig. E.1). Do not use scissors or wire cutters because these tools will deform the air line, causing it to leak around fittings. Do not cut the lines at an angle.

The minimum bend radius for 1/4" air line is 1". The minimum bend radius for 3/8" air line is 1.5". Do not bend the air line less than the minimum bend radius or side load the fitting connections. Air lines are to be installed straight into fittings.

Inspect the air line for scratches that run lengthwise prior to installation. Contact Air Lift customer service at **(800) 248-0892** if the air line is damaged.

To watch a video demonstrating proper air line cutting, go to air-lift.co/cuttingairline

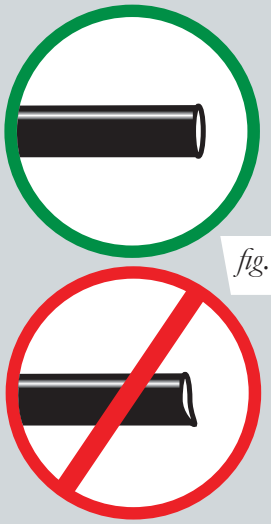

fig. E.1

PUSH-TO-CONNECT FITTINGS

Air lines should be pushed into the push-to-connect fittings firmly, with a slight side-to-side rotational twist. Check the connection by pulling on each line to verify a robust connection.

NOTE

To release the air line from the connection (Fig. E.2), first release all air from the system. Push in on the air line (step 1), push the collar in (step 2), and with the collar depressed, pull the air line out of the fitting (step 3).

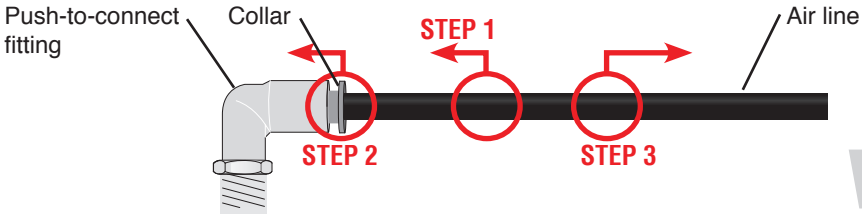

fig. E.2

CHECKING FOR LEAKS

1. Inflate the air spring to 75-90 PSI.
2. Spray all connections with a solution of 1/5 liquid dish soap and 4/5 water. Spot leaks easily by looking for bubbles in the soapy water.
3. After the test, deflate the springs to the minimum pressure required to restore the system to normal ride height.
4. Check the air pressure again after 24 hours. A 2-4 PSI loss after initial installation is normal. Retest for leaks if the loss is more than 5 PSI.

FIXING LEAKS

1. If there is a problem with the push-to-connect fitting, remove the air line as described above. Trim 1” off the end of the air line. Be sure the cut is clean and square (see Fig. E.1).
2. Reinsert the air line into the push-to-connect fitting as described above.

F. Before Operating

SETTING THE RIDE HEIGHT

1. With the suspension fully compressed, take a measurement from the fender to a chosen reference point – typically the center of the axle. Record this measurement as max compression (MC).
2. Cycle the suspension to max extension (ME) and record the measurement from the fender to the same reference point.
3. Add ME and MC, then divide the total by 2. Set the suspension to this point. This position will give 50% stroke in either direction and is a starting point for ride height (Fig. F.1).

Formula for Calculating Ride Height
(ME+MC)÷2=MID STROKE

fig. F.1

4. With the suspension at this position, loosen, then re-torque all suspension bushing pivot joint fasteners to the manufacturer's specifications (Table 1):

Torque Specifications		
Location	Nm	Lb.-ft.
Air spring bolts	27	20
Shock rod nut	38	28
Air fittings (with thread sealant)	1 3/4 turns beyond hand tight	
Shock upper mount to chassis	28	21
Shock lower mount bolt	100 + 90 degrees	74 + 90 degrees
Lower control arm to hub	165 + 90 degrees	122 + 90 degrees
Lower control arm to subframe	165 + 90 degrees	122 + 90 degrees
Toe link to hub	100 + 90 degrees	74 + 90 degrees
Toe link to subframe	100 + 90 degrees	74 + 90 degrees
Shock locking collar	1/4 turn beyond hand tight	
Wheel bolts	140	103

Table 1

Suggested Driving Air Pressure	Maximum Air Pressure
90-110 PSI	**150 PSI**
FAILURE TO MAINTAIN ADEQUATE MINIMUM PRESSURE (OR PRESSURE PROPORTIONAL TO LOAD) MAY RESULT IN EXCESSIVE BOTTOMING OUT AND **WILL VOID THE WARRANTY**.	

Table 2

CHECK FOR BINDING

1. Inflate and deflate the system (do not exceed 150 PSI) to check for clearance or binding issues. With the air springs deflated, check clearances on everything so as not to pinch brake lines, vent tubes, etc. Clear lines if necessary.
2. Inflate the air springs to 75-90 PSI and check all connections for leaks.

⚠ CAUTION

MAKE SURE THE FRONT WHEELS ARE STRAIGHT WHEN DEFLATING AND REINFLATING AIR BAGS.

DAMPING ADJUSTMENT

Suspension damping is a matter of compromise. Setting it too stiff will make the ride feel jarring. In addition, if the suspension is too stiff, the tires will lose contact with the road, reducing control and power delivery. On the other hand, if the suspension is too soft, the car can experience brake dive and excessive bouncing. The sweet spot lies somewhere in the middle. Air Lift dampers have a range of adjustment, which allows the driver to tune the ride and handling to his or her preferences.

Air Lift recommends damper and air pressure settings for every vehicle kit, but it is impossible to consider every situation. For example, even though Air Lift kits replace the dampers and springs, vehicles with sport-tuned suspensions might have stiffer bushings, larger anti-roll bars, bigger wheels, wider tires, etc. These settings may need to be adjusted to different vehicles and driving characteristics.

1. The dampers in this kit have 30 settings, or “clicks,” of adjustable compression and rebound damping characteristics. Damping is changed through the damper rod using the adjuster (Fig. F.2).
2. Turn the adjuster clockwise (H) and the damping settings are hardened, reducing oscillations and body motion. Turn the adjuster counterclockwise (S) and the damping is softened.
3. Each damper in this kit is preset to “-16 clicks.” This means that the damper is adjusted 16 clicks away from full stiff, which starts at 0. Counting up from full stiff is the preferred method of keeping track of, or setting, damping. This setting was developed on a 2012 BMW 328i.

fig. F.2

ALIGNING THE VEHICLE

1. Set the vehicle to the height at which it will most often be driven.
2. If the ride height is lower than stock, Air Lift Performance recommends loosening all pivot points (bolts, nuts) on any control arm, strut arm or radius rod that contains bushings. Once they have been loosened, re-torque to stock specifications (Table 1).

NOTE

It may be necessary to cycle the suspension to loosen the bushing from its mount. This will help re-orient the bushing at its new position based on the chosen ride height.

3. Get a shop alignment of the vehicle at the new chosen ride height.

ADJUSTING EXTENDED OR DROP HEIGHT USING LOWER MOUNT

These dampers have been pre-set at the factory to provide maximum drop height while maintaining adequate tire clearance to the air spring. If you wish to gain more extended height (lift), which is the same as reducing drop height, or want to lower the chassis further and there is still adjustment available at the lower mount, please use the following procedure:

1. Support the vehicle with jack stands or a hoist at approved lifting points.
2. Remove the wheel.
3. Using the supplied spanner wrench, loosen the locking collar (Fig. F.3).

The dampers in this kit may look different, but they all allow adjustment of the locking collar with the included spanner wrench.

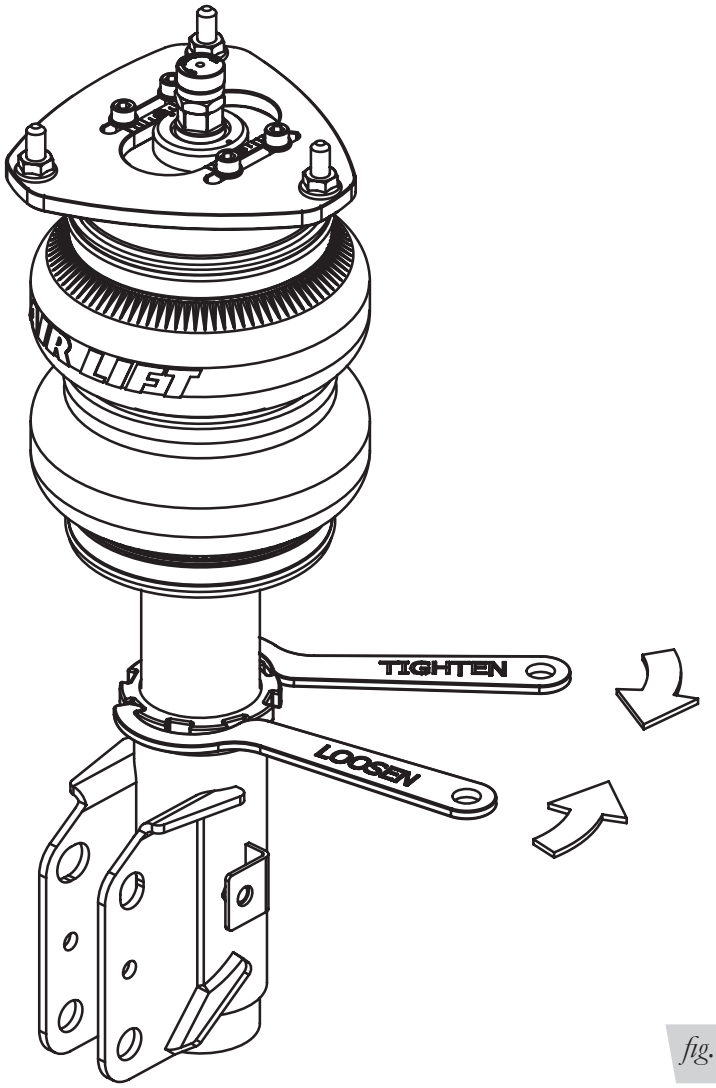

fig. F.3

4. Deflate the air spring to 0 PSI on the corner you are adjusting.
5. Disconnect lower mount from suspension.
6. Spin the lower mount to the desired location.

NOTE *Not all vehicles will have further drop height available.*

7. Re-install lower mount to suspension and torque fasteners.
8. Tighten the lower locking collar to the lower mount using significant force.

⚠ CAUTION

WHEN ADJUSTING HEIGHT UPWARD, MAKE SURE THAT THE DAMPER BODY ENGAGES ALL THE THREADS OF THE LOWER MOUNT (FIG. F.4). WHEN ADJUSTING DOWNWARD, MAKE SURE THERE IS ADEQUATE AIR SPRING CLEARANCE TO THE TIRE/WHEEL ASSEMBLY. CLEARANCE MUST BE CHECKED WITH SYSTEM FULLY DEFLATED AS WELL AS FULLY INFLATED TO ENSURE THAT NO RUBBING OCCURS. FAILURE TO MAINTAIN ADEQUATE CLEARANCE CAN RESULT IN AIR SPRING FAILURE AND WILL NOT BE COVERED UNDER WARRANTY.

⚠ CAUTION

DO NOT ADJUST HEIGHT BY SPINNING AIR SPRING ON DAMPER! DOING SO MAY CAUSE AN AIR LEAK AND COMPROMISE THE ASSEMBLY.

FOR STRUTS:

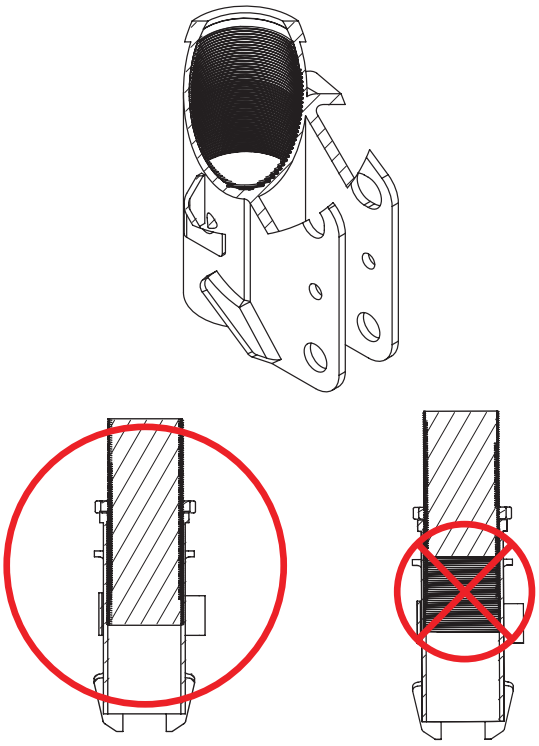

OK, no threads showing.

Not OK, threads are showing.

FOR SHOCKS:

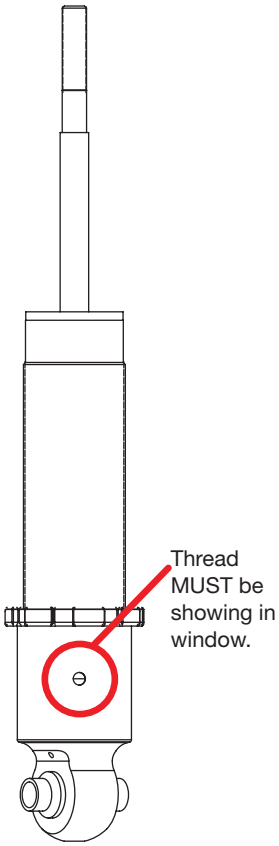

fig. F.4

INSTALLATION CHECKLIST

☐ **Clearance** — Inflate the air springs to 75-90 PSI and make sure there is at least 1/2" clearance from anything that might rub against the air spring. This should be checked with the air spring fully inflated and fully deflated.

☐ **Leak** — Inflate the air springs to 75-90 PSI and check all connections for leaks. All leaks must be eliminated before the vehicle is road tested.

☐ **Heat** — Be sure there is sufficient clearance from heat sources, at least 6" for air springs and air lines. If a heat shield was included in the kit, install it. If there is no heat shield, but one is required, call Air Lift customer service at **(800) 248-0892**.

☐ **Fastener** — Recheck all bolts for proper torque.

☐ **Road** — Inflate the springs to recommended driving pressures. Drive the vehicle 10 miles and recheck for clearance, loose fasteners and air leaks.

☐ **Operating instructions** — If professionally installed, the installer should review the operating instructions with the owner. Be sure to provide the owner with all paperwork that came with the kit.

POST-INSTALLATION CHECKLIST

☐ **Overnight leak down test** — Recheck air pressure 24 hours after installation and driving of the vehicle. If the pressure has dropped more than 5 PSI, there is a leak that must be fixed.

☐ **Air pressure requirements** — It is important to understand the air pressure requirements of the air spring system. Regardless of load, the air pressure should always be adjusted to maintain adequate ride height at all times while driving.

☐ **Thirty-day or 500-mile test** —Recheck the air spring system after 30 days or 500 miles, whichever comes first. If any part shows signs of rubbing or abrasion, the source should be identified and moved, if possible. If it is not possible to relocate the cause of the abrasion, the air spring may need to be remounted. If professionally installed, the installer should be consulted. Check all fasteners for tightness.

G. Use, Maintenance and Servicing

1. An Air Lift air management system is strongly recommended for this product, but it is possible to operate without one. The air lines can be routed to Schrader valves for use with a separate air compressor. Air lines and Schrader valves are not included with Air Lift Performance kits and would need to be purchased separately. To learn more about Air Lift management systems visit **air-lift.co/productlines**.
2. Check the air pressure before driving.

⚠ WARNING

BEFORE SERVICING THE VEHICLE, MAKE SURE TO TURN OFF “RISE ON START” AND “PRESET MAINTAIN.” THIS WILL ELIMINATE ANY UNINTENDED SUSPENSION CYCLING IF YOU NEED TO TURN THE KEY ON IN THE VEHICLE FOR ANY REASON.

TUNING THE AIR PRESSURE

Pressure determination comes down to three things — level vehicle, ride comfort and stability.

1. **Level vehicle**
   Depending on load, it is possible one side will need more pressure than the other to level the vehicle.
2. **Ride comfort**
   If the vehicle has a harsh ride, it may be due to either too much pressure or not enough causing frequent bottoming. Also, riding the vehicle at the top, or close to the top of the available stroke will cause an uncomfortable ride due to a lack of rebound travel. This situation should be avoided for driving any significant distance. Try different pressures to determine the best ride comfort. See the Air Lift suggested driving air pressure for this vehicle (Table 2).
3. **Stability**
   Stability translates into safety and should be the priority, meaning the driver may need to sacrifice a perfectly level and comfortable ride. Stability issues include roll control, bounce, dive during braking and sponginess. Tuning out these problems usually requires additional air pressure, damping or both.

TROUBLESHOOTING GUIDE

PROBLEM	CAUSE	SOLUTION
Air spring won't maintain pressure.	Leak at fitting, air line not cut properly or damage to air line during installation.	Find location of leak by spraying listed components with soapy water solution and look for bubbles. Tighten air fitting, re-cut air line or replace damaged components.
	Leak at lower O-ring on damper if air spring is over the damper.	Spray bottom of air spring with soapy water solution and look for bubbles. Contact Air Lift customer service at **(800) 248-0892** to determine if component should be replaced.
Knocking noise when hitting bumps.	Loose suspension component such as locking collar on damper.	Tighten lower locking collar with significant force, check and tighten suspension components to factory specs at desired ride height.
	Driving vehicle too close to maximum extension.	Check current ride height and compare to maximum height. If there is less than 1" (25mm) difference, reduce air pressure to lower ride height.
		Lengthen strut or shock to increase available up travel.
Suspension bottoms out.	Air pressure is too low, causing air springs to bottom out.	Raise air pressure.
The ride is too bouncy.	Air pressure is too high, causing air springs to be too stiff.	Lower air pressure and adjust damper length if necessary to achieve proper ride height.
	Damping is inadequate.	Increase damping with adjusters.
The ride is too soft or floaty.	Damping is inadequate.	
The ride is too harsh.	Excessive damping.	Reduce damping with adjusters.

Limited Warranty and Return Policy

Air Lift Company provides a 1-year limited warranty to the original purchaser of Air Lift Performance damper kits from the date of original purchase, that the products will be free from defects in workmanship and materials when used on vehicles as specified by Air Lift Company and under normal operating conditions, subject to the requirements and exclusions set forth in the full Limited Warranty and Return Policy that is available online at **www.airliftperformance.com/warranty**.

For additional warranty information contact Air Lift Company customer service.

Replacement Part Information

If replacement parts are needed, contact the local dealer or call Air Lift customer service at **(800) 248-0892**. Most parts are immediately available and can be shipped the same day.

Contact Air Lift Company customer service at (800) 248-0892 first if:

- Parts are missing from the kit.
- Need technical assistance on installation or operation.
- Broken or defective parts in the kit.
- Wrong parts in the kit.
- Have a warranty claim or question.

Contact the retailer where the kit was purchased:

- If it is necessary to return or exchange the kit for any reason.
- If there is a problem with shipping if shipped from the retailer.
- If there is a problem with the price.

Contact Information

Mailing address	P.O. Box 80167 Lansing, MI 48908-0167
Shipping address for returns	2727 Snow Road Lansing, MI 48917
Phone	Toll free: (800) 248-0892 International: (517) 322-2144
Email	service@airliftcompany.com
Web address	www.airliftcompany.com

Air Lift Company reserves the right to make changes and improvements to its products and publications at any time. For the latest version of this manual, contact Air Lift Company at **(800) 248-0892** or visit **www.airliftperformance.com**.

Need Help?

Contact Air Lift Company customer service department by calling (800) 248-0892. For calls from outside the USA or Canada, dial (517) 322-2144.

Connect by searching for **Air Lift Performance** *#LifeonAir*

Thank you for purchasing Air Lift Performance products!

Air Lift Performance • 2727 Snow Road • Lansing, MI 48917 or P.O. Box 80167 • Lansing, MI 48908-0167
Toll Free (800) 248-0892 • Local (517) 322-2144 • Fax (517) 322-0240 • www.airliftperformance.com

Printed in the USA
BGL-0816